CF Rimoldi

Parts catalogue

264-04-1MB-02
264-04-1MB-04
264-04-1MB-03

Nr. 631

TAV. N TAB. N.	DESCRIZIONE	DESCRIPTION	DESCRIPTION
1	BASE E BRACCIO CON BUSSOLE	BASE AND ARM WITH BUSHES	BASE ET BRAS AVEC BAGUES
2	PASSAFILI E TENSIONE CROCHET INF.	THREAD GUIDE AND TENSION	PASSE-FILS ET TENSION
3	COPERCHI E PIANO LAVORO	COVERS AND WORKING PLATE	CARTERS ET PLAN DE TRAVAIL
4	GRUPPO PORTA GRIFFA	FEED DOG HOLDER ASSEMBLY	GROUPE PORTE-GRIFFE
5	GRUPPO BIELLA	CON-ROD ASSEMBLY	GROUPE BIELLE
6	GRUPPO ALBERO INFERIORE	LOWER SHAFT ASSEMBLY	GROUPE ARBRE INFERIEUR
7	GRUPPO CROCHET INFERIORE	LOWER LOOPER ASSEMBLY	GROUPE CROCHET INFERIEUR
8	ALBERO SUPERIORE E BARRA AGO	UPPER SHAFT AND NEEDLE BAR	ARBRE SUP. ET BARRE AIGUILLE
9	GRUPPO PREMISTOFFA	PRESSER ASSEMBLY	GROUPE PRESSEUR
10	GRUPPO TENSIONI ANTERIORI	FRONT TENSIONS ASSEMBLY	GROUPE TENSIONS AVANT
1	BACINELLA OLIO	OIL SUMP	RESERVOIR HUILE
1.	LUBRIFICAZIONE E POMPA OLIO	LUBRICATION AND OIL PUMP	LUBRIFICATION ET POMPE A HUILE
13	ORGANI DI CUCITURA	SEWING PARTS	ORGANES COUTURE
14	ACCESSORI IN DOTAZIONE	AUXILIARY EQUIPMENT	ACCESSOIRES EN DOTATION
15	PIAZZAMENTO NORMALE	NORMAL SETTING	INSTALLATION NORMALE
16	PIAZZAMENTO INCASSATO	SUBMERGED SETTING	INSTALLATION ENCASTREE
17	PORTA BOBINE	BOBBIN HOLDER	PORTE BOBINE
18	TESTA 264-04-1MB-04	264-04-1MB-04 HEAD	TETE 264-04-1MB-04
19 - 21	TESTA 264-04-1MB-03	264-04-1MB-03 HEAD	TETE 264-04-1MB-03

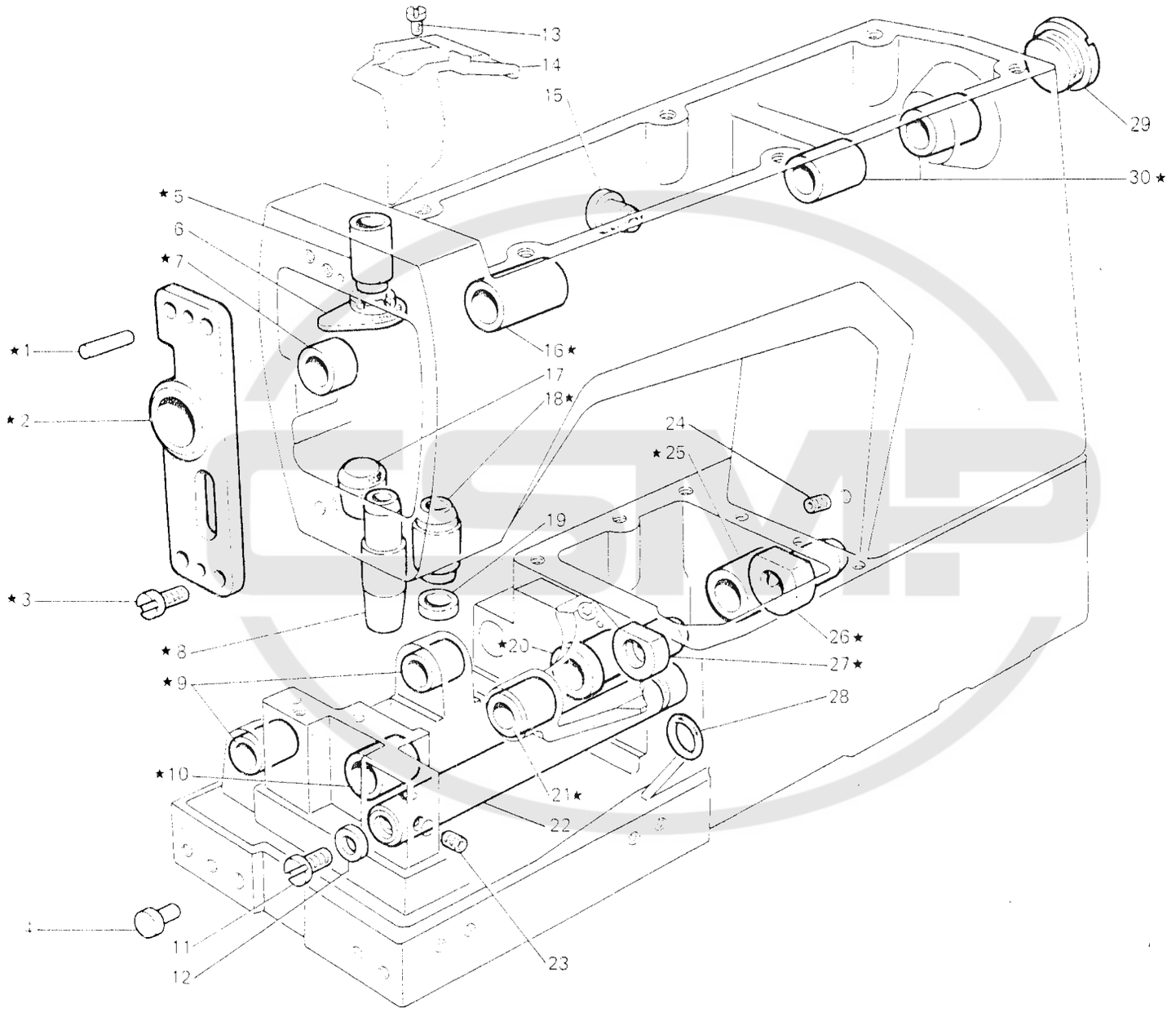
13
14
15
29
30 ★
★5
6
★7
★1
16★
17
18★
★2
24
★25
19
★3
26★
★8
★20
27★
★9
28
★10
21★
22
11
12
23

Fig. N. Abb. N.	Part. N. Piece N. Bestell N. Pieza N.	Qt. Anzahl	DESCRIZIONE	DESCRIPTION	DESCRIPTION	BENENNUNG	DESCRIPCION
★	308608-3-20	1	base e braccio con bussole (308654-3)	base and arm with bushes	base et bras avec bagues		
1	706454-0-00	2	spina	pin	goupille		
2	308859-2-00	1	supporto con bussola	support with bush	support avec bague		
3	722084-2-00	4	vite	screw	vis		
4	202398-0-10	1	tappo	plug	bouchon		
5	308032-0-00	1	bussola	bush	bague		
6	308215-0-00	1	protezione olio	oil protection	protection huile		
7	308858-0-00	1	bussola	bush	bague		
8	308406-0-00	1	bussola	bush	bague		
9	308296-0-00	2	bussola	bush	bague		
10	308293-0-02	1	bussola	bush	bague		
11	742214-2-00	1	vite	screw	vis		
12	705734-0-00	1	guarnizione	gasket	garniture		
13	721444-2-00	1	vite	screw	vis		
14	308138-0-12	1	carter paraolio	oil retainer cover	carter protection huile		
15	303501-0-10	1	tappo per foto tendifilo	plug	bouchon		
16	308852-0-01	1	bussola	bush	bague		
17	308094-0-00	1	tappo foro bussola	plug	bouchon		
18	308031-0-00	1	bussola	bush	bague		
19	308218-0-00	1	scodellino inferiore	lower cup	cuvette inférieure		
20	308009-0-00	1	bussola	bush	bague		
21	303885-0-11	1	bussola	bush	bague		
22	308755-0-01	1	perno scarico olio	pin	pivot		
23	730033-2-00	1	vite	screw	vis		
24	729032-2-00	1	vite	screw	vis		
25	308086-0-11	1	bussola	bush	bague		
26	308756-0-00	1	bussola	bush	bague		
27	303854-0-11	1	bussola	bush	bague		
28	701014-0-00	1	anello di tenuta	retainer ring	bague d'étanchéité		
29	302356-0-10	1	tappo	plug	bouchon		
30	308853-0-01	2	bussola	bush	bague		

CSMP

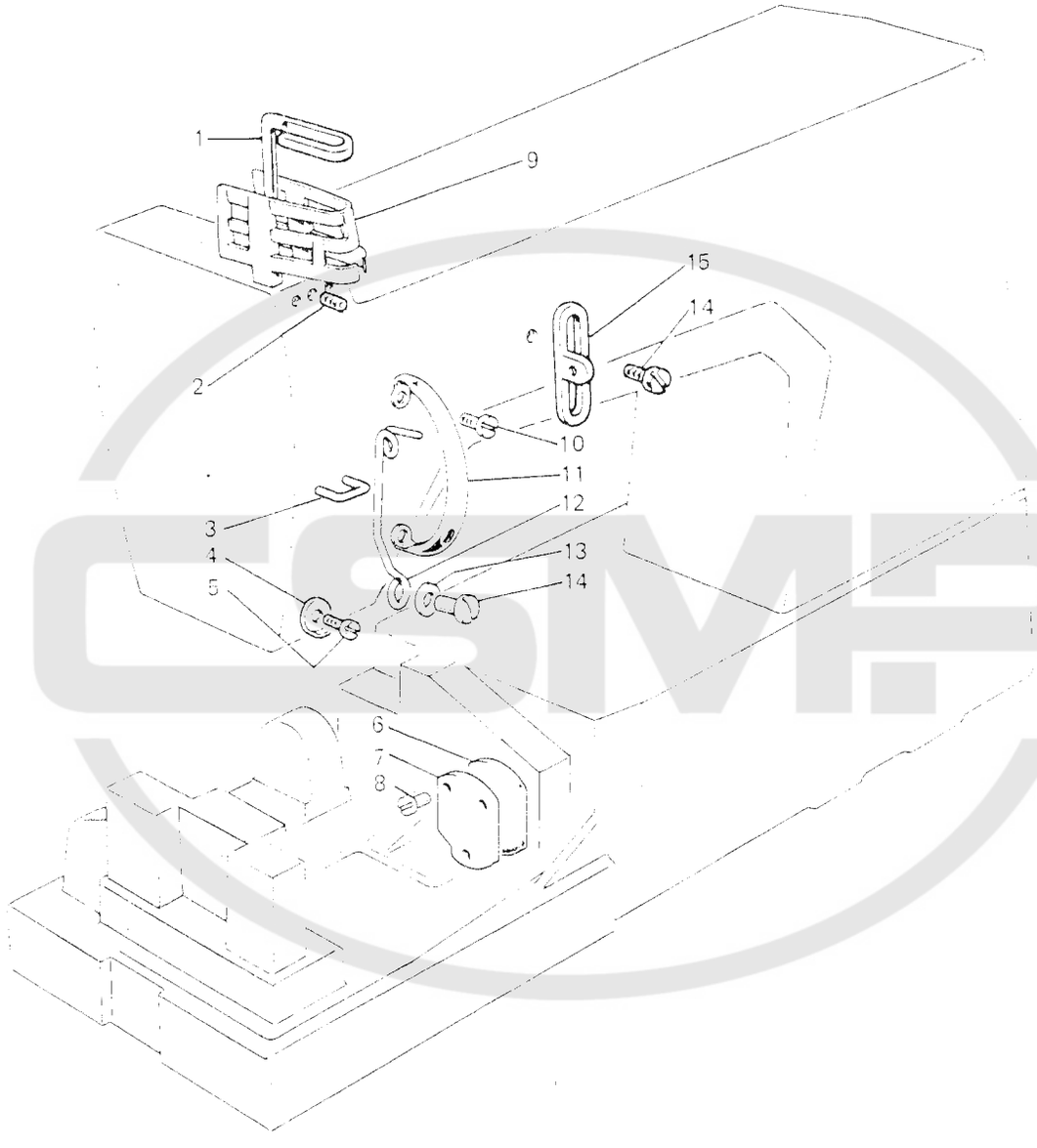
1
9
15
14
2
10
11
12
3
13
4
14
5
6
7
8

Fig. N. Abb. N.	Part. N. Pece N. Bestell N. Pieza N.	Ot. Anzahl	DESCRIZIONE	DESCRIPTION	DESCRIPTION	BENENNUNG	DESCRIPCION
1	302136-0-12	1	passafilo	thread guide	passe-fil		
2	729012-2-00	3	vite	screw	vis		
3	308137-0-00	1	cavallotto	coupling	cavalier		
4	308201-0-02	1	passafilo	thread guide	passe-fil		
5	724420-2-00	1	vite	screw	vis		
6	308809-0-01	1	guarnizione	gasket	garniture		
7	308810-0-01	1	mascherina para olio	oil retainer flange	flasque pare-huile		
8	741675-2-00	3	vite	screw	vis		
9	313375-0-01	1	protezione tendifilo sup.	upper thread take-up protection	protection tendeur du fil sup.		
10	721444-2-00	2	vite	screw	vis		
11	308107-0-01	1	protezione tendifilo inf.	lower thread take-up protection	protection tendeur du fil inf.		
12	309334-0-00	1	passafilo	thread guide	passe-fil		
13	704210-4-00	1	rondella	washer	rondelle		
14	303045-0-10	3	vite	screw	vis		
15	308200-0-01	2	guidafilo	thread guide	guide-fil		

CSMP

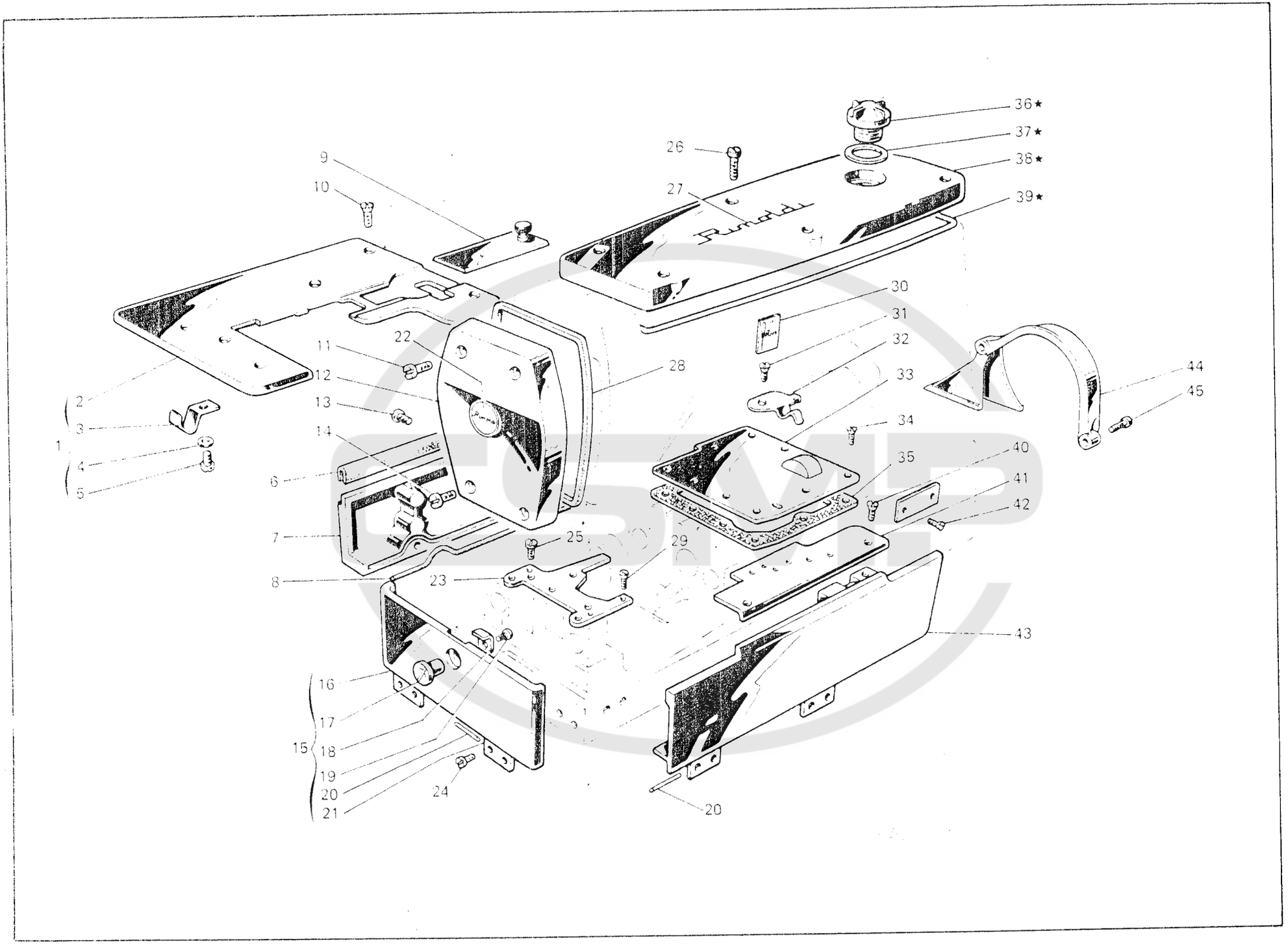
36★
37★
38★
39★
26
27
9
10
30
31
32
33
34
35
40
41
42
44
45
22
11
12
13
14
28
2
3
1
4
5
6
7
8
25
29
23
43
16
17
15
18
19
20
21
24
20

Fig. N. Abb. N.	Part. N. Piece N. Bestell N. Pieza N.	Qt. Anzahl	DESCRIZIONE	DESCRIPTION	DESCRIPTION	BENENNUNG	DESCRIPCION
★	308103-4-10	1	coperchio sup. completo	upper cover assembly	couvercle sup. complet		
1	309068-4-00	1	piano di lavoro completo	working plate assembly	plan de travail complet		
2	309049-2-00	1	piano di lavoro	working plate	plan de travail		
3	309351-0-00	1	molla	spring	ressort		
4	704306-0-00	1	rondella	washer	rondelle		
5	720411-2-00	1	vite	screw	vis		
6	309088-0-01	1	guarnizione	gasket	garniture		
7	309086-0-01	1	carter posteriore	rear cover	carter arrière		
8	309084-0-00	1	guarnizione	gasket	garniture		
9	309302-2-00	1	coperchio scorrevole	sliding cover	couvercle coulissant		
10	744636-2-00	5	vite	screw	vis		
11	302354-0-20	2	vite superiore	upper screw	vis supérieure		
12	308100-0-01	1	coperchio laterale	side cover	couvercle latéral		
13	741088-2-00	3	vite per carter posteriore	screw for rear cover	vis pour carter arrière		
14	302353-0-10	2	vite	screw	vis		
15	309139-4-00	1	carter laterale completo	side cover assembly	carter latéral complet		
16	309126-3-00	1	carter laterale	side cover	carter latéral		
17	309372-0-00	1	perno	pin	pivot		
18	309371-0-00	1	chiavistello	key	cié		
19	741658-2-00	1	vite	screw	vis		
20	707556-0-00	4	spina	pin	goupille		
21	309332-0-00	4	cerniera	hinge	charnière		
22	304662-0-10	1	targhetta	plate	plaque		
23	308790-2-00	1	piastra porta placca	plate	plaque		
24	300483-0-10	8	vite per cerniera	screw for hinge	vis pour charnière		
25	302355-0-10	2	vite per piastra	screw for plate	vis pour plaque		
26	742282-2-00	6	vite per coperchio	screw for cover	vis pour couvercle		
27	300006-0-12	2	decalcomania	decalcomania	décalcomanie		
28	308128-0-00	1	guarnizione coperchio	cover gasket	garniture couvercle		
29	744730-0-00	2	vite per placca ago	screw for needle plate	vis pour plaque à aiguille		
30	788021-0-01	1	decalcomania sistema aghi	needles decalcomania	décalcomanie syst. aiguille		
31	721474-2-00	1	vite	screw	vis		
32	309360-0-00	1	molla chiusura carter	spring	ressort		
33	~~309377-2-10~~ P304324-2-10	1	piastra superiore	upper plate	plaque supérieure		
34	741936-2-00	8	vite per piastra	screw for plate	vis pour plaque		
35	309323-0-00	1	guarnizione	gasket	garniture		
36	202239-0-10	1	cupolina	cup	coupole		
37	705970-0-00	1	guarnizione per cupolina	gasket	garniture		
38	308102-0-10	1	coperchio superiore	upper cover	couvercle supérieur		
39	308129-0-01	1	guarnizione per coperchio	gasket for cover	garniture pour couvercle		
40	744676-2-00	2	vite	screw	vis		
41	309256-0-00	1	piastra piano di lavoro	working plate	plaque plan de travail		
42	202165-0-10	2	vite per targhetta	screw for plate	vis pour plaquette		
43	309177-3-00	1	carter anteriore completo	front cover assembly	carter avant complet		
44	308461-0-00	1	carter copricinghia	cover	carter		
45	721475-2-00	2	vite	screw	vis		

SMP

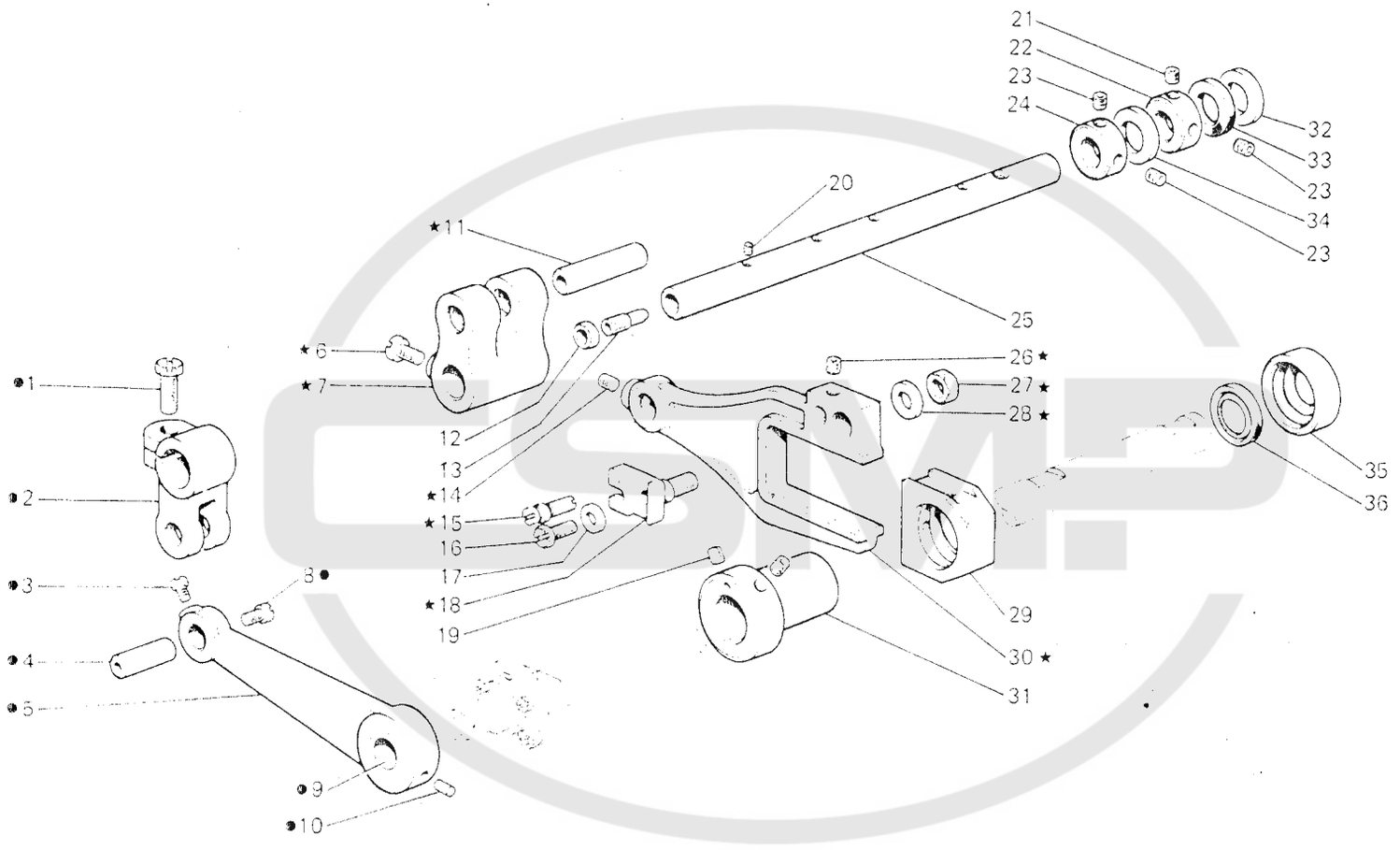
21
22
23
24
32
33
23
34
23
20
★11
25
★6
★7
26★
27★
28★
1
12
13
★14
★15
16
17
★18
19
2
3
8●
4
5
9
10
29
30★
31
35
36

Fig. N. Abb. N.	Part. N. Piece N. Bestell N. Pieza N.	Qt. Anzahl	DESCRIZIONE	DESCRIPTION	DESCRIPTION	BENENNUNG	DESCRIPCION
★	308816-4-00	1	gruppo porta griffa	feed dog holder assembly	groupe porte griffe		
●	308286-4-10	1	gruppo leva	lever assembly	groupe levier		
1	202486-0-10	1	vite	screw	vis		
2	301519-2-11	1	giunto con vite	joint with screw	joint avec vis		
3	742813-0-00	1	vite	screw	vis		
4	308285-2-02	1	perno con vite	pin with screw	pivot avec vis		
5	308283-2-10	1	leva comando porta griffa	lever	levier		
6	729013-2-00	2	vite	screw	vis		
7	308815-2-00	1	supporto con viti	support with screw	support avec vis		
8	304640-0-10	1	vite	screw	vis		
9	303484-0-10	1	cuscinetto	bearing	coussinet		
10	301586-0-10	1	tappo	plug	bouchon		
11	308814-0-00	1	perno	pin	pivot		
12	746406-2-00	1	dado	nut	écrou		
13	308294-0-10	1	limitatore olio	oil limiter	limiteur huile		
14	727215-2-00	1	vite	screw	vis		
15	304612-0-11	1	perno eccentrico	eccentric pin	pivot excentrique		
16	304684-0-10	1	vite fissa griffa	screw	vis		
17	704406-0-00	1	rondella	washer	rondelle		
18	304616-0-11	1	squadretta porta griffa	bracket	équerre		
19	727215-0-00	2	vite	screw	vis		
20	206708-0-00	2	dosatore olio	oil dosimeter	doseur huile		
21	728232-0-00	1	vite	screw	vis		
22	309839-2-01	1	anello di registro con viti	adjustment screw	bague de réglage		
23	745136-2-00	3	vite	screw	vis		
24	309838-2-01	1	anello di registro con viti	adjustment ring with screw	bague de réglage avec vis		
25	308806-4-11	1	contralbero trasporto compl.	transport countershaft assembly	axe transport compl.		
26	745812-2-00	1	vite	screw	vis		
27	746408-2-00	1	dado	nut	écrou		
28	704419-0-00	1	rondella	washer	rondelle		
29	303893-0-10	1	blocchetto scorrevole	block	bloc		
30	303858-0-10	1	braccio	arm	bras		
31	308029-2-00	1	eccentrico con viti	eccentric with screw	excentrique avec vis		
32	704347-0-00	1	rondella	washer	rondelle		
33	308287-0-00	1	anello di tenuta	retainer ring	bague d'étanchéité		
34	704846-0-00	1	rondella	washer	rondelle		
35	308891-0-00	1	cappuccio testa bussola	cap	capuchon		
36	308119-0-00	1	anello di tenuta	retainer ring	bague d'étanchéité		

SMP

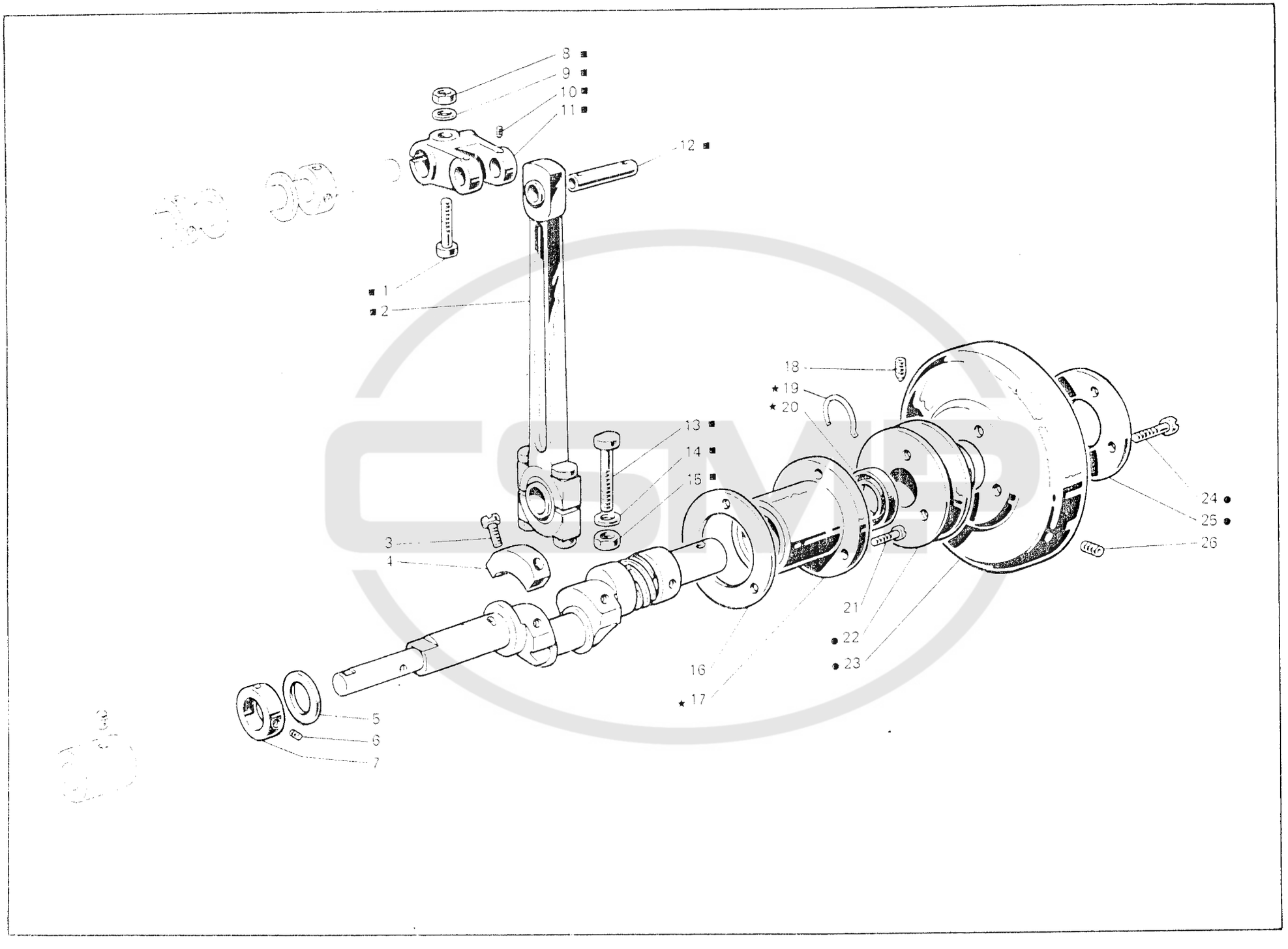
8 ■
9 ■
10 ■
11 ■
12 ■
■ 1
■ 2
18
★ 19
★ 20
13 ■
14 ■
15 ■
3
4
24 ●
25 ●
26
21
● 22
● 23
16
★ 17
5
6
7

Fig. N Abb. N.	Part. N. Piece N. Bestell N. Pieza N.	Qt. Anzahl	DESCRIZIONE	DESCRIPTION	DESCRIPTION	BENENNUNG	DESCRIPCION
★	308013-4-02	1	bussola destra completa	right bush assembly	bague droite complète		
●	308047-4-00	1	volantino completo	handwheel assembly	volant complet		
■	308178-4-01	1	gruppo biella principale	main con-rod assembly	groupe bielle principale		
1	308855-0-00	1	vite	screw	vis		
2	308174-3-01	1	biella principale completa	main con-rod assembly	bielle principale complète		
3	741056-0-00	4	vite	screw	vis		
4	302272-0-10	2	settore	sector	secteur		
5	704869-0-00	1	rondella	washer	rondelle		
6	745815-2-00	2	vite	screw	vis		
7	308084-2-00	1	anello di registro con viti	adjustment ring with screw	bague de réglage avec vis		
8	746408-2-00	1	dado	nut	écrou		
9	705013-0-00	1	rondella	washer	rondelle		
10	745812-2-00	2	vite	screw	vis		
11	308159-2-01	1	manovella	crank	manivelle		
12	308166-0-00	1	perno	pin	pivot		
13	308161-0-00	2	vite	screw	vis		
14	308149-0-01	2	rondella	washer	rondelle		
15	308162-0-00	2	dado	nut	écrou		
16	308127-0-00	1	guarnizione	gasket	garniture		
17	308012-2-10	1	bussola	bush	bague		
18	730054-2-00	1	vite per volantino	screw for handwheel	vis pour volant		
19	308389-0-00	1	anello elastico	spring ring	anneau ressort		
20	700596-0-00	1	anello di tenuta	retainer ring	bague d'étanchéité		
21	742222-2-00	3	vite	screw	vis		
22	308197-0-00	1	puleggia	pulley	poulie		
23	308410-0-00	1	volantino	handwheel	volant		
24	741984-2-00	3	vite	screw	vis		
25	308199-0-00	1	flangia	flange	flasque		
26	729044-2-00	1	vite	screw	vis		

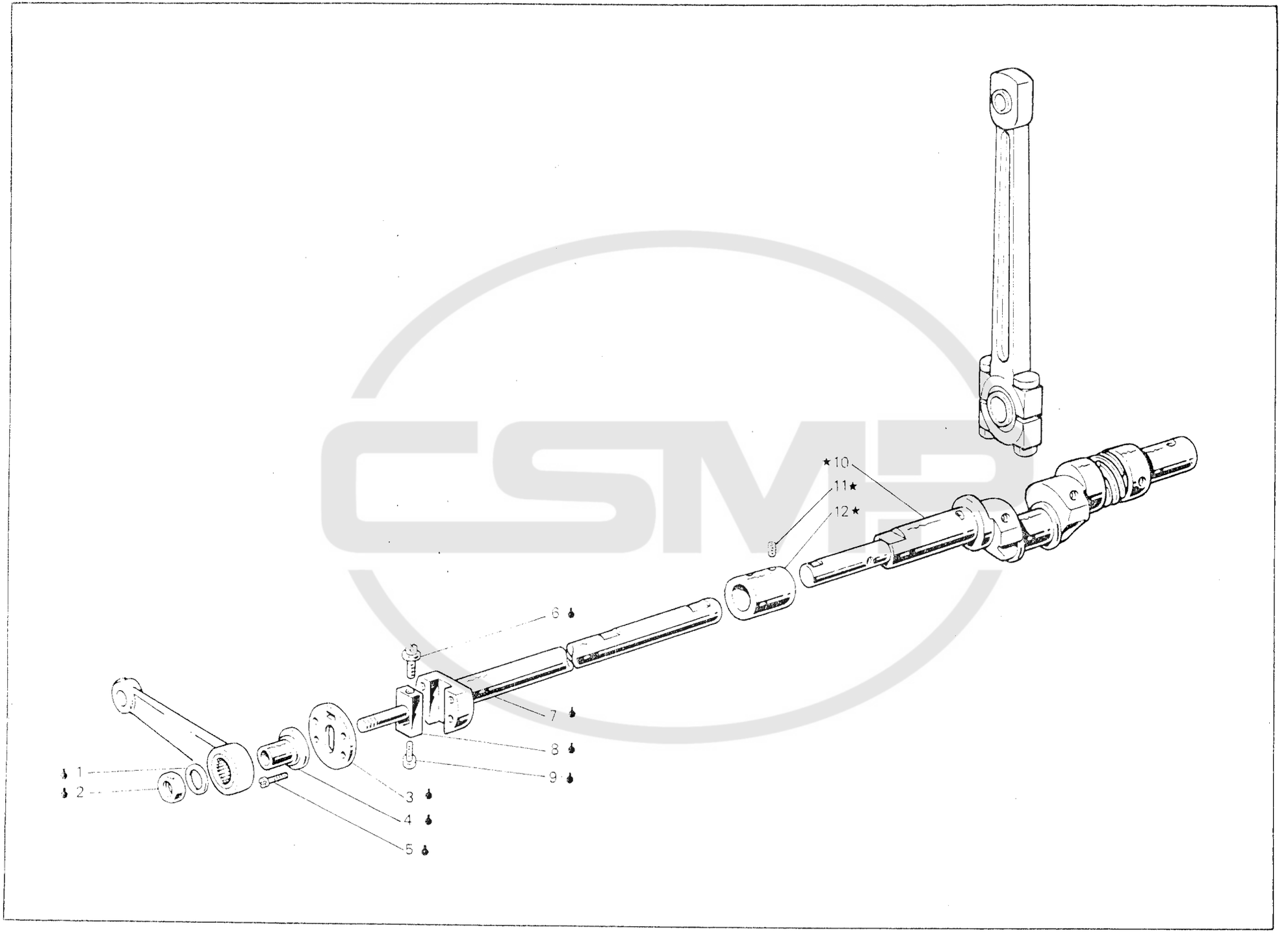

CSMB

Fig. N. Abb. N.	Part. N. Piece N. Bestell N. Pieza N.	Qt. Anzahl	DESCRIZIONE	DESCRIPTION	DESCRIPTION	BENENNUNG	DESCRIPCION
★	309713-4-01	1	gruppo albero inf. compl. (con fig. ♦)	lower shaft assembly (with fig. ♦)	arbre inférieur complet (avec fig. ♦)		
♦	308363-4-01	1	semialbero inf. sinistro compl.	left lower half-shaft assembly	semi-arbre in. gauche compl.		
1	704814-0-00	1	rondella	washer	rondelle		
2	746612-2-00	1	dado	nut	écrou		
3	308774-2-00	1	piastra disco	disc plate	plaque		
4	303458-0-12	1	bussola	bush	bague		
5	724441-0-00	4	vite	screw	vis		
6	308281-0-00	1	vite di registro	screw	vis		
7	308390-2-10	1	semialbero	half-shaft	semi-arbre		
8	308278-0-01	1	perno	pin	pivot		
9	308780-2-00	1	vite di registro	adjustment screw	vis de réglage		
10	308714-3-01	1	semialbero inf. destro	right lower half-shaft	semi-arbre inf. droite		
11	745827-2-00	4	vite per manicotto	screw for coupling	vis pour manchon		
12	308015-0-00	1	manicotto	coupling	manchon		

CSMP

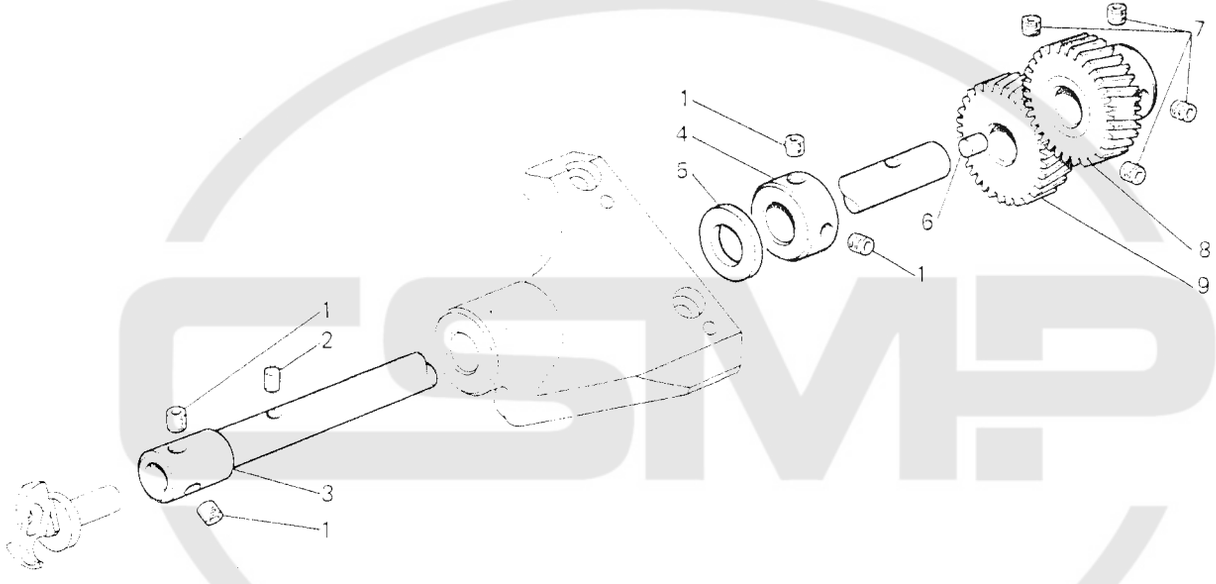

CSMP

Fig. N. Abb. N.	Part. N. Piece N. Bestell N. Pieza N.	Qt. Anzahl	DESCRIZIONE	DESCRIPTION	DESCRIPTION	BENENNUNG	DESCRIPCION
1	745812-2-00	4	vite	screw	vis		
2	206708-0-00	1	dosatore olio	oil dosimeter	doseur huile		
3	308754-2-00	1	albero porta crochet compl.	looper holder shaft assembly	arbre porte crochet compl.		
4	303899-0-11	1	anello di registro	adjustment ring	bague de réglage		
5	705230-0-00	1	rondella	washer	rondelle		
6	302333-0-10	2	tappo	plug	bouchon		
7	729013-2-00	4	vite	screw	vis		
8	303897-2-10	1	ingranaggio condotto	gear	engrenage		
9	303894-0-10	1	ingranaggio conduttore	gear	engrenage		

CSMP

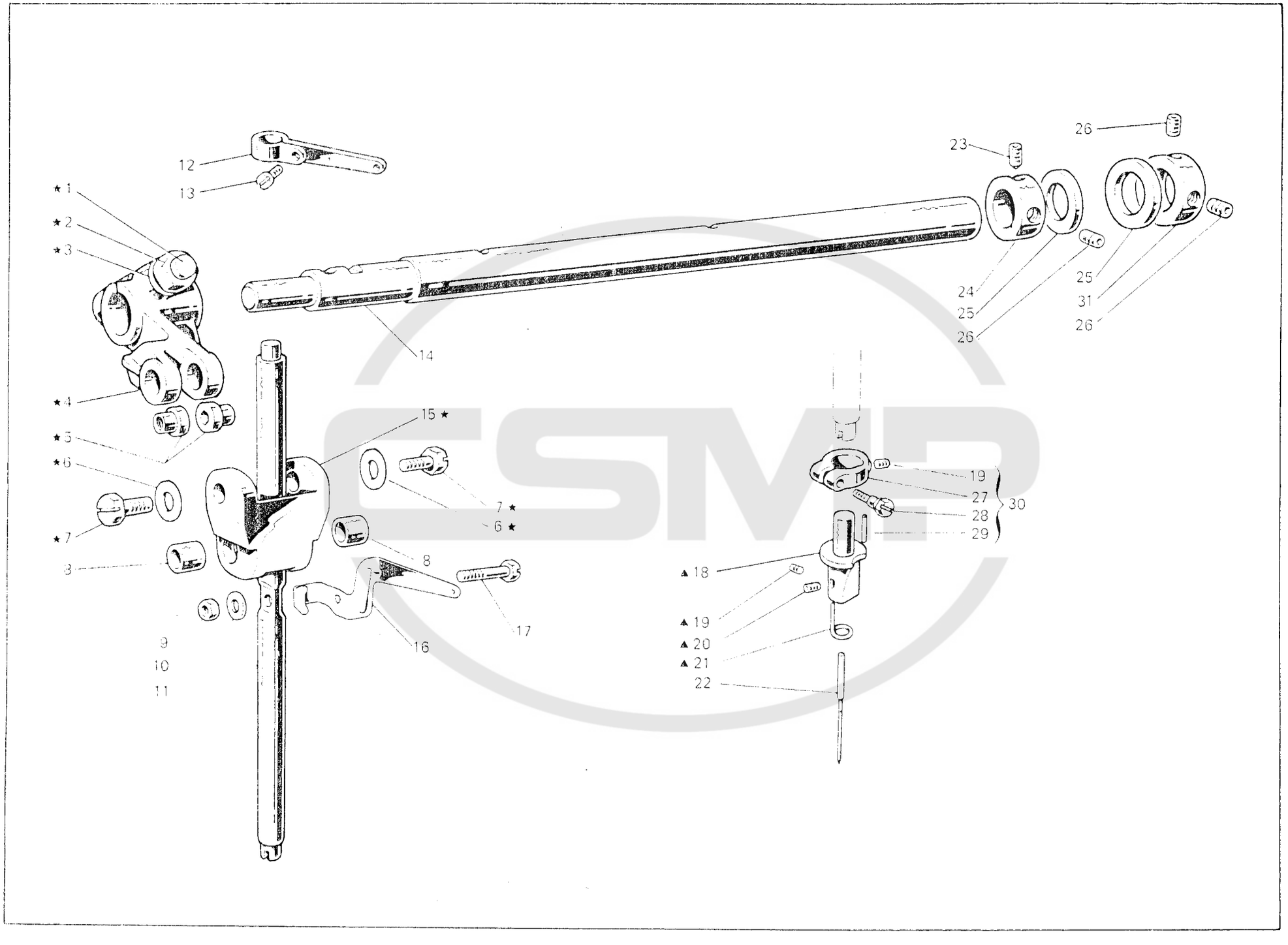
12
13
★ 1
★ 2
★ 3
14
23
26
24
25
26
25
31
26
★ 4
★ 5
★ 6
★ 7
3
15 ★
7 ★
6 ★
8
17
16
9
10
11
19
27
28
29
30
▲ 18
▲ 19
▲ 20
▲ 21
22

Fig. N. Abb. N.	Part. N. Piece N. Bestell N. Pieza N.	Qt. Anzahl	DESCRIZIONE	DESCRIPTION	DESCRIPTION	BENENNUNG	DESCRIPCION
★	308006-4-00	1	gruppo manov. giunto barra ago	crank and joint assembly	groupe maniv. joint barre-aiguille		
▲	303184-4-10	1	morsetto porta aghi completo	needle clamp assembly	porte-aiguille complet		
1	308855-0-00	1	perno a vite	threaded pin	pivot à vis		
2	746408-2-00	1	dado	nut	écrou		
3	705013-0-00	1	rondella	washer	rondelle		
4	308036-2-00	1	manovella completa	crank assembly	manivelle compl.		
5	308037-0-00	2	perno superiore	upper pin	pivot supérieur		
6	704210-4-00	2	rondella	washer	rondelle		
7	308039-0-01	2	vite	screw	vis		
8	308041-0-00	2	bussola inferiore	lower bush	bague inférieur		
9	302338-0-10	1	dado	nut	écrou		
10	703005-0-00	1	rondella	washer	rondelle		
11	308220-0-00	1	barra ago	needle bar	barre-aiguille		
12	308400-2-01	1	tendifilo superiore	upper thread take-up	tendeur du fil supérieur		
13	742311-2-00	1	vite	screw	vis		
14	308851-2-01	1	albero superiore	upper shaft	arbre supérieur		
15	308038-0-10	1	giunto barra ago	needle bar joint	joint barre-aiguille		
16	308401-0-20	1	tendifilo inferiore	lower thread take-up	tendeur du fil inférieur		
17	308042-0-00	1	perno per barra ago	pin for needle bar	pivot pour barre-aiguille		
18	303183-2-10	1	morsetto porta aghi	needle clamp	porte-aiguille		
19	745001-2-00	2	vite	screw	vis		
20	745800-2-00	1	vite	screw	vis		
21	303455-0-10	1	passafilo	thread guide	passe-fil		
22	766200-6-11	1	ago RIM 64 fin. 110	needle RIM 64 size 110	aiguille RIM 64 jauge 110		
23	730033-2-00	1	vite	screw	vis		
24	309831-2-00	1	anello di registro con viti	adjustment ring with screw	bague de réglage avec vis		
25	704869-0-00	2	rondella	washer	rondelle		
26	729013-2-00	3	vite	screw	vis		
27	302591-2-11	1	fascetta per barra ago	clamp for needle bar	bride pour barre-aiguille		
28	302352-0-10	1	vite	screw	vis		
29	303174-0-10	1	spinetta	pin	goupille		
30	303171-4-10	1	fascetta completa	clamp assembly	bride complète		
31	309830-2-00	1	anello di registro con viti	adjustment ring with screw	bague de réglage avec vis		

SMP

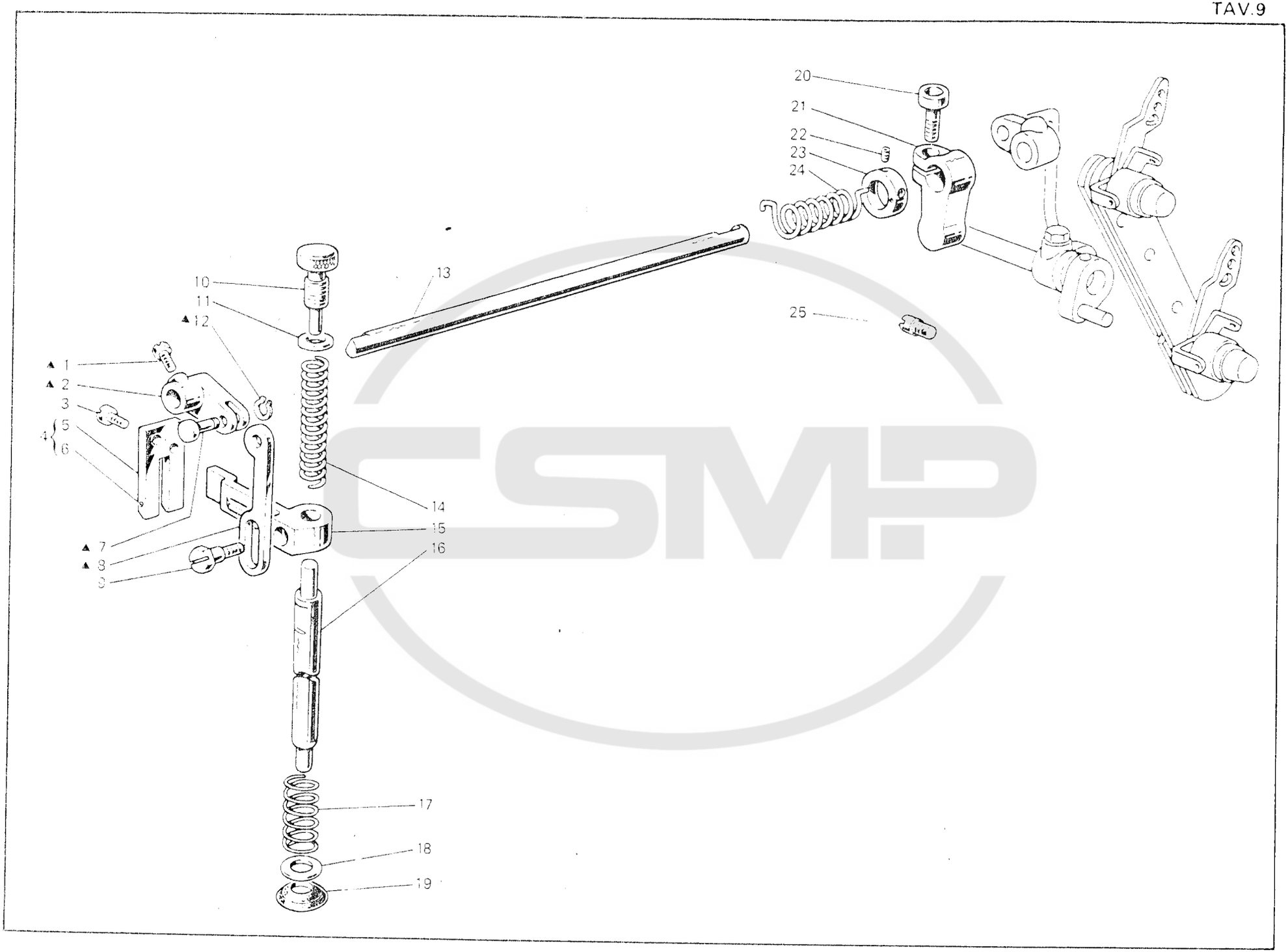
20
21
22
23
24
25
13
10
11
▲ 12
▲ 1
▲ 2
3
4
5
6
14
15
16
▲ 7
▲ 8
9
17
18
19

Fig. N. Abb. N.	Part. N. Piece N. Beste N. Pezzi N.	Qt. Anzahl	DESCRIZIONE	DESCRIPTION	DESCRIPTION	BENENNUNG	DESCRIPCION
▲	308060-4-00	1	gruppo manov.tirante premist.	presser crank assembly	groupe maniv. tirant presseur		
1	740632-2-00	1	vite	screw	vis		
2	308059-0-00	1	manovella	crank	manivelle		
3	721494-2-00	2	vite fissa piastra	plate screw	vis blocage plaque		
4	308052-4-00	1	piastra guida barra compl.	plate assembly	plaque complète		
5	308056-0-01	1	piastra guida barra	plate	plaque		
6	707240-0-00	1	spina elastica	split pin	goupille réglable		
7	308058-0-00	1	spina	pin	goupille		
8	308057-0-00	1	tirante per alza piedino	presserfoot tie-rod	tirant soulèv. pied-presseur		
9	740444-2-00	1	vite fissa slitta	screw	vis		
10	302060-0-11	1	pomolo di regolazione	adjustment knob	pommeau de réglage		
11	302344-0-10	1	rondella	washer	rondelle		
12	700205-0-00	1	anello elastico	spring ring	anneau ressort		
13	302234-0-10	1	albero	shaft	arbre		
14	302059-0-10	1	molla premi piedino	spring	ressort		
15	308055-2-00	1	guida a forcella	fork guide	guide a fourchette		
16	308061-0-01	1	barra porta piedino	presserfoot bar	barre porte pied-presseur		
17	308148-0-00	1	molla	spring	ressort		
18	704236-2-00	1	rondella	washer	rondelle		
19	308054-0-01	1	paraolio	oil retainer	pare-huile		
20	744332-2-00	1	vite	screw	vis		
21	308412-2-02	1	fascetta di fermo con vite	clamp with screw	bride de fixation avec vis		
22	745827-2-00	2	vite	screw	vis		
23	304767-2-11	1	anello per molla	ring	bague		
24	308098-0-00	1	molla di torsione	spring	ressort de torsion		
25	308007-0-00	1	perno filettato	threaded pin	pivot fileté		

SMP

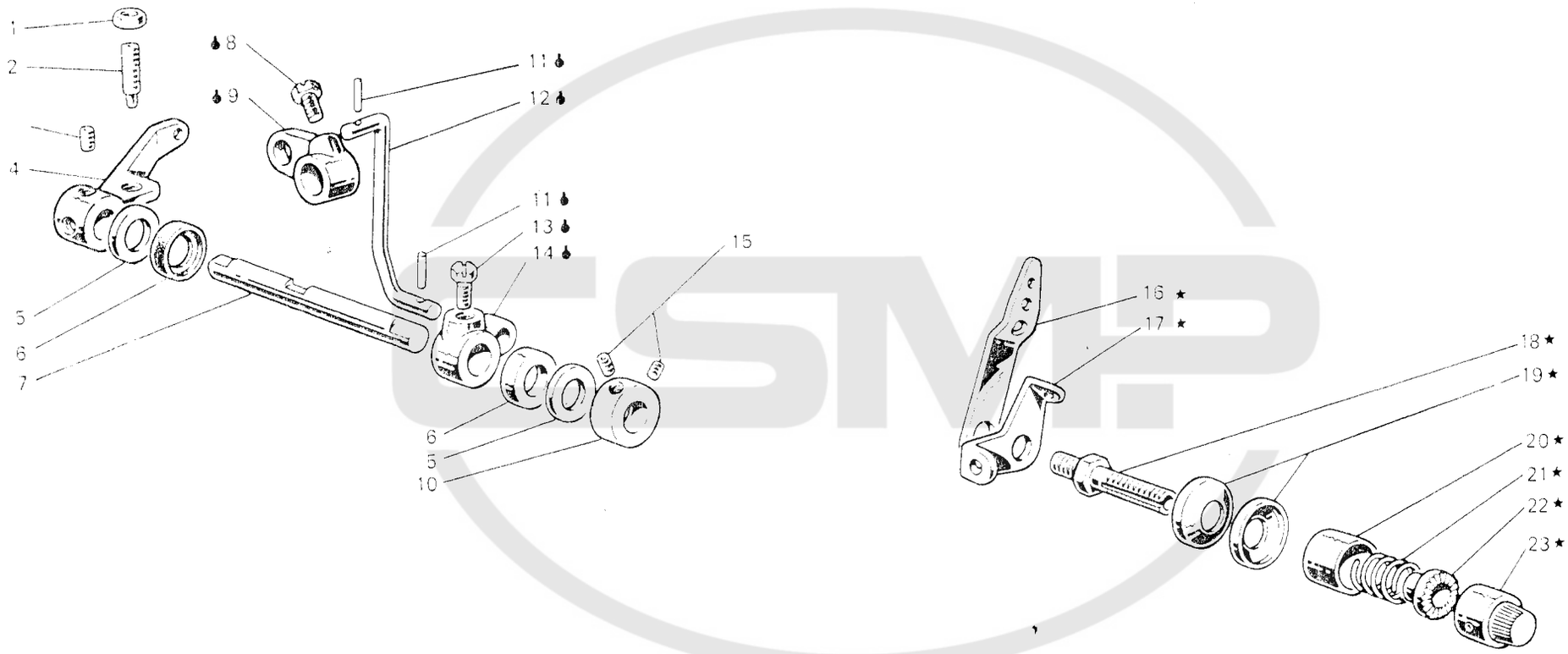
1
2
4
5
6
7
8
9
11
12
11
13
14
15
6
5
10
16 ★
17 ★
18 ★
19 ★
20 ★
21 ★
22 ★
23 ★

Fig. N. Abb. N.	Part. N. Piece N. Bestell N. Pieza N.	Qt. Anzahl	DESCRIZIONE	DESCRIPTION	DESCRIPTION	BENENNUNG	DESCRIPCION
★	308522-4-00	1	gruppo tensioni	tension assembly	groupe tension		
♦	308320-4-00	1	tirante con leva	tie-rod with lever	tirant avec levier		
1	746204-0-00	1	dado	nut	écrou		
2	729884-2-00	1	vite	screw	vis		
3	729034-2-00	2	vite per leva	screw for lever	vis pour levier		
4	308062-2-01	1	leva comando alza piedino	presserfoot control lever	levier soulèv. pied-presseur		
5	704240-2-00	2	rondella	washer	rondelle		
6	304763-0-10	2	anello di tenuta	retainer ring	bague d'étanchéité		
7	308996-0-02	1	albero comando alza piedino	shaft	arbre		
8	740632-2-00	1	vite	screw	vis		
9	302232-0-10	1	leva superiore	upper lever	levier supérieur		
10	302284-2-10	1	leva sblocca tensione	lever	levier		
11	707241-0-00	1	spina elastica	split pin	goupille réglable		
12	308321-0-00	1	tirante	tie-rod	tirant		
13	740034-2-00	1	vite per leva	screw for lever	vis pour levier		
14	302238-0-10	1	leva per tirante	tie-rod lever	levier pour tirant		
15	729012-2-00	2	vite	screw	vis		
16	308501-0-01	1	passafilo	thread guide	passe-fil		
17	308503-0-01	1	guidafilo	thread guide	guide-fil		
18	308549-0-00	1	perno a vite	threaded pin	pivot à vis		
19	300218-0-10	2	disco tensione	tension disc	disque tension		
20	202556-0-00	1	scodellino	cup	cuvette		
21	200713-0-10	1	molla	spring	ressort		
22	202229-0-10	1	bussola superiore	upper bush	bague supérieure		
23	202558-2-00	1	pomolo	knob	pommeau		

CSMP

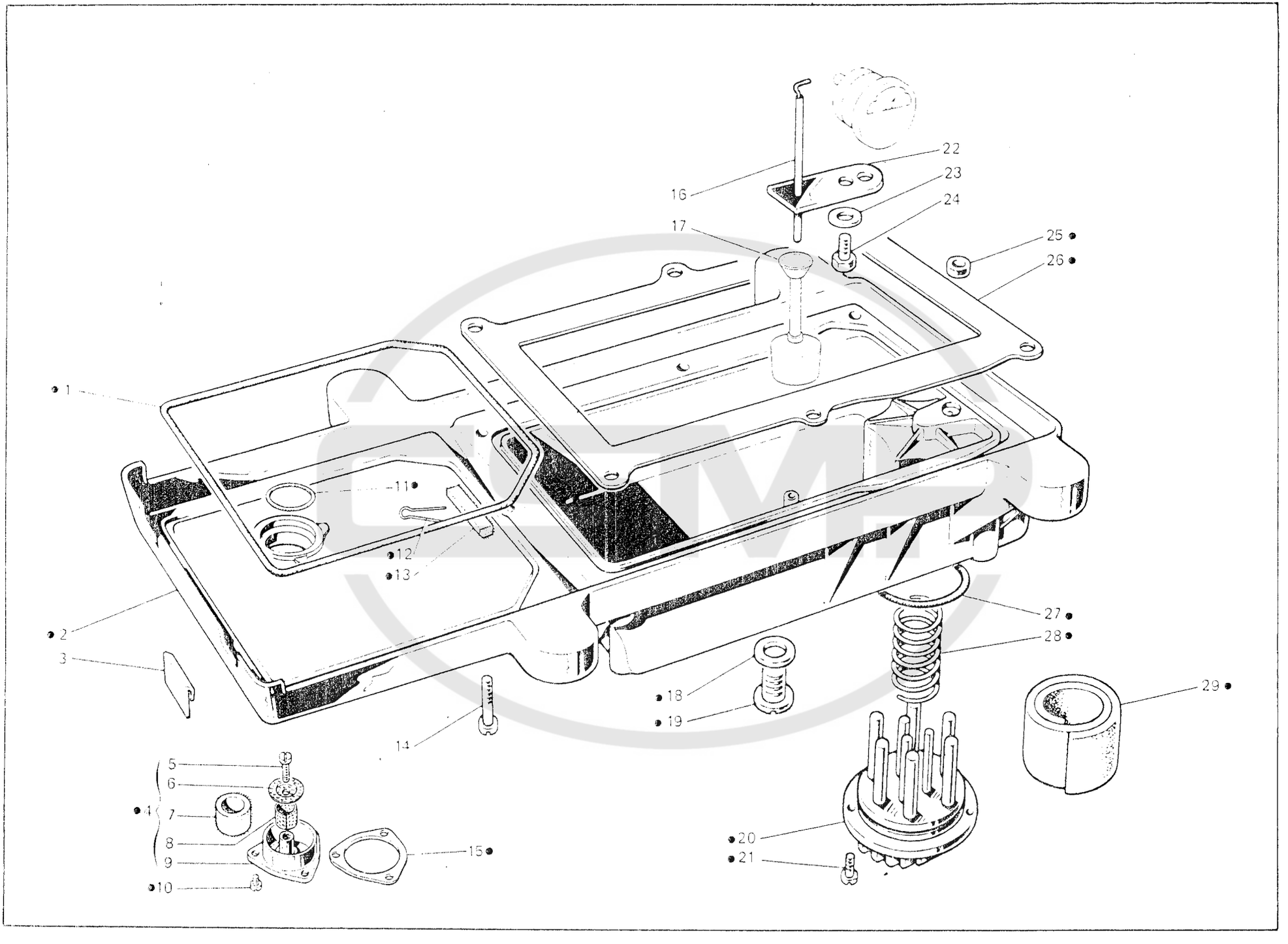
1
2
3
4
5
6
7
8
9
10
11
12
13
14
15
16
17
18
19
20
21
22
23
24
25
26
27
28
29

Fig. N Abb. N.	Part. N. Piece N. Bestell N. Pieza N.	Qt. Anzahl	DESCRIZIONE	DESCRIPTION	DESCRIPTION	BENENNUNG	DESCRIPCION
•	308588-4-10	1	bacinella olio completa	oil sump assembly	réservoir huile complet		
1	308125-0-01	1	guarnizione	gasket	garniture		
2	308576-2-20	1	bacinella	oil sump	réservoir		
3	308002-0-00	2	piastrina per bacinella	sheet for oil sump	plaquette pour réservoir		
4	308331-4-00	1	tappo completo	plug assembly	bouchon complet		
5	721484-2-00	1	vite	screw	vis		
6	308209-0-00	1	dischetto	disc	disque		
7	308206-0-00	1	filtro olio	oil filter	filtre huile		
8	308210-0-00	1	cilindretto	cylinder	cylindre		
9	308208-0-00	1	tappo	plug	bouchon		
10	722411-2-00	3	vite	screw	vis		
11	701134-0-00	1	guarnizione	gasket	garniture		
12	308957-0-00	1	clip	clip	clip		
13	308213-0-00	1	feltro	felt	feutre		
14	722453-2-00	6	vite fiss. bacinella	oil sump fixing screw	vis blocage réservoir		
15	308179-0-00	1	guarnizione	gasket	garniture		
16	308379-0-00	1	astina livello olio	stick	jauge niveau huile		
17	206665-2-00	1	galleggiante	float	floatteur		
18	705977-0-00	1	rondella	washer	rondelle		
19	206564-0-00	1	tappo	plug	bouchon		
20	206560-0-10	1	coperchio	cover	couvercle		
21	722063-2-00	2	vite	screw	vis		
22	308226-0-02	1	guida astina	guide for stick	guide barre		
23	703003-0-00	1	rondella elastica	spring washer	rondelle élastique		
24	740240-0-00	1	vite	screw	vis		
25	308113-0-00	1	anello	ring	anneau		
26	311395-0-00	1	guarnizione	gasket	garniture		
27	701051-0-00	1	guarnizione	gasket	garniture		
28	206545-0-00	1	molla a spirale	spring	ressort		
29	206559-0-01	1	filtro olio	oil filter	filtre huile		

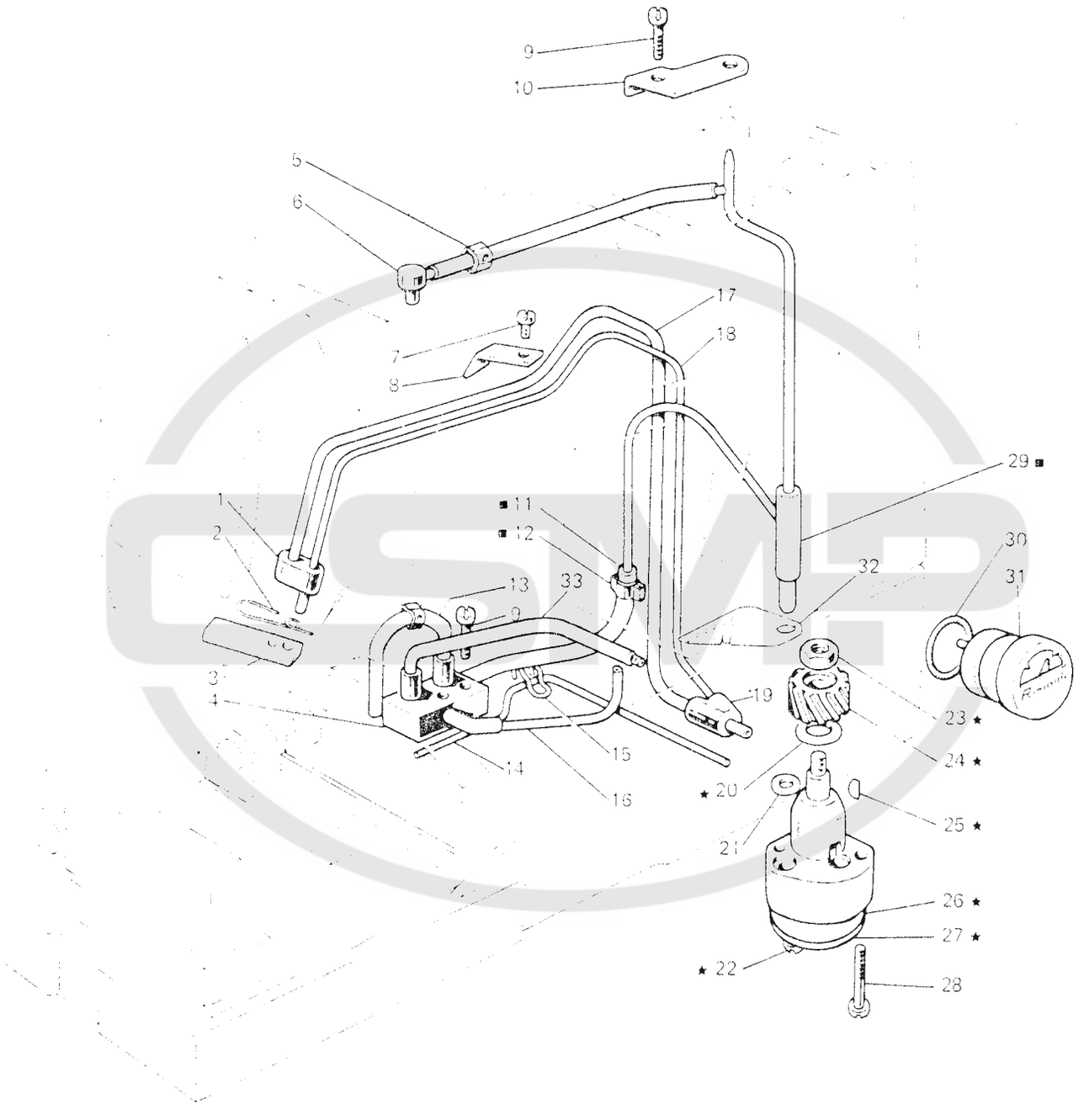
9
10
5
6
17
18
7
8
29 ■
1
2
■ 11
■ 12
30
31
32
13
33
9
3
4
19
23 ★
24 ★
15
14
16
★ 20
25 ★
21
26 ★
27 ★
★ 22
28

Fig. N. Abb. N.	Part. N. Piece N. Bestell N. Pieza N.	Qt. Anzahl	DESCRIZIONE	DESCRIPTION	DESCRIPTION	BENENNUNG	DESCRIPCION
■	310500-4-00	1	raccordo mandata olio compl.	pipe connection assembly	raccord envoi huile compl.		
★	308105-4-03	1	pompa olio completa	oil pump assembly	pompe à huile complète		
1	308123-0-00	1	raccordo superiore	upper pipe connection	raccord supérieur		
2	307990-0-00	1	molletta	spring	ressort		
3	307991-0-00	1	feltro	felt	feutre		
4	308114-2-02	1	distributore	distributor	distributeur		
5	308040-2-00	1	tubetto	pipe	tube		
6	308214-0-00	1	raccordo mandata olio	pipe connection	raccord		
7	721424-2-00	1	vite	screw	vis		
8	308184-0-00	1	fascetta	clamp	bride		
9	721514-0-00	3	vite	screw	vis		
10	308104-0-00	1	piastrina	plate	plaquette		
11	308207-0-00	1	tubetto	pipe	tube		
12	308043-0-00	1	fascetta	clamp	bride		
13	310561-2-00	1	tubetto	pipe	tube		
14	790325-0-00	1	tubetto	pipe	tube		
15	308211-0-00	2	clip	clip	clip		
16	790315-0-00	1	tubetto	pipe	tube		
17	790342-0-00	1	tubetto recupero olio	pipe	tube		
18	790242-0-00	1	tubetto recupero olio	pipe	tube		
19	308185-0-00	1	raccordo inferiore	lower pipe connection	raccord inférieur		
20	704813-0-00	1	rondella	washer	rondelle		
21	701004-0-00	1	anello di tenuta	retainer ring	bague d'étanchéité		
22	741082-2-00	2	vite	screw	vis		
23	733507-0-00	1	dado	nut	écrou		
24	206555-0-01	1	ingranaggio	gear	engrenage		
25	206557-0-00	1	chiavetta	key	clavette		
26	308110-3-02	1	corpo pompa aspirante	suction pump body	corps pompe admission		
27	308111-0-00	1	coperchio pompa	pump cover	couvercle pompe		
28	741092-0-00	2	vite fissaggio pompa	pump fixing screw	vis fixation pompe		
29	308180-2-00	1	raccordo mandata olio	pipe connection	raccord		
30	701032-0-00	1	anello di tenuta	retainer ring	bague d'étanchéité		
31	206669-2-02	1	indicatore livello olio	oil level gauge	indicateur niveau huile		
32	305666-0-00	1	lamierino	sheet	plaque		
33	790313-0-00	1	tubetto	pipe	tube		

SMP

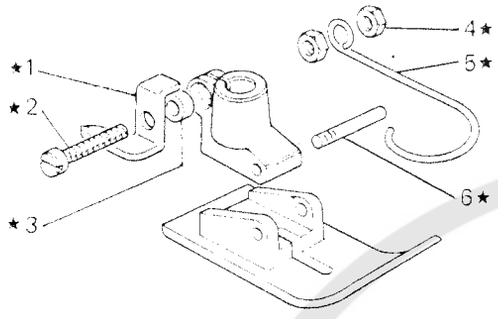
★1
★2
★3
4★
5★
6★

9

10

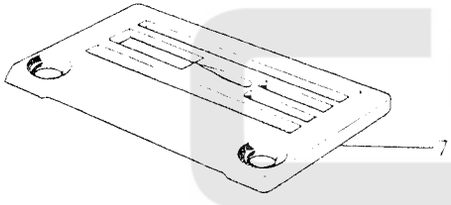
7

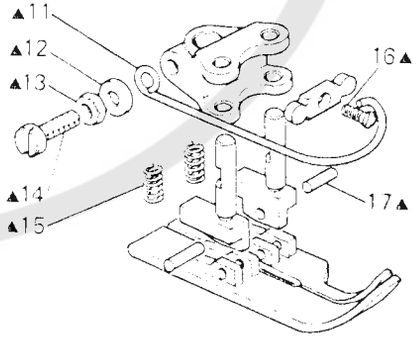
▲11
▲12
▲13
▲14
▲15
16▲
17▲

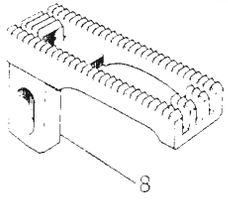
8

Fig. N. Abb. N.	Part. N. Piece N. Bestell N. Pieza N.	Qt. Anzahl	DESCRIZIONE	DESCRIPTION	DESCRIPTION	BENENNUNG	DESCRIPCION
★	306665-3-01	1	piedino completo	presserfoot assembly	pied-presseur complet		
1	303442-0-11	1	taglia catenella	chain cutting	coupe-chaînette		
2	741791-2-00	1	vite	screw	vis		
3	303504-0-10	1	distanziale	spacer	entretoise		
4	733504-2-00	2	dado	nut	écrou		
5	990808-0-01	1	salvadita	protection	protection		
6	300873-0-12	1	spina filettata	pin	goupille		
7	303869-0-10	1	piacca ago	needle plate	plaque à aiguille		
8	303860-0-10	1	griffa	feed dog	griffe		
9	303868-0-10	1	crochet inferiore	lower looper	crochet inférieur		
10	785356-0-40	1	targhetta classe testa	head class plate	plaque classe tête		
			SOLO A RICHIESTA	ONLY ON REQUEST	SEULEMENT SUR DEMANDE		
▲	306666-3-01	1	piedino completo	presserfoot assembly	pied-presseur complet		
7	303902-0-10	1	placca ago	needle plate	plaque à aiguille		
	303907-0-10	1	placca ago	needle plate	plaque à aiguille		
8	303892-0-10	1	griffa	feed dog	griffe		
11	990802-0-00	1	salvadita	protection	protection		
12	704213-2-00	1	rondella	washer	rondelle		
13	733002-2-00	1	dado	nut	écrou		
14	742050-2-00	1	vite	screw	vis		
15	304809-0-10	2	molla	spring	ressort		
16	304807-0-11	1	vite	screw	vis		
17	200469-0-10	2	spina	pin	goupille		

CSMP

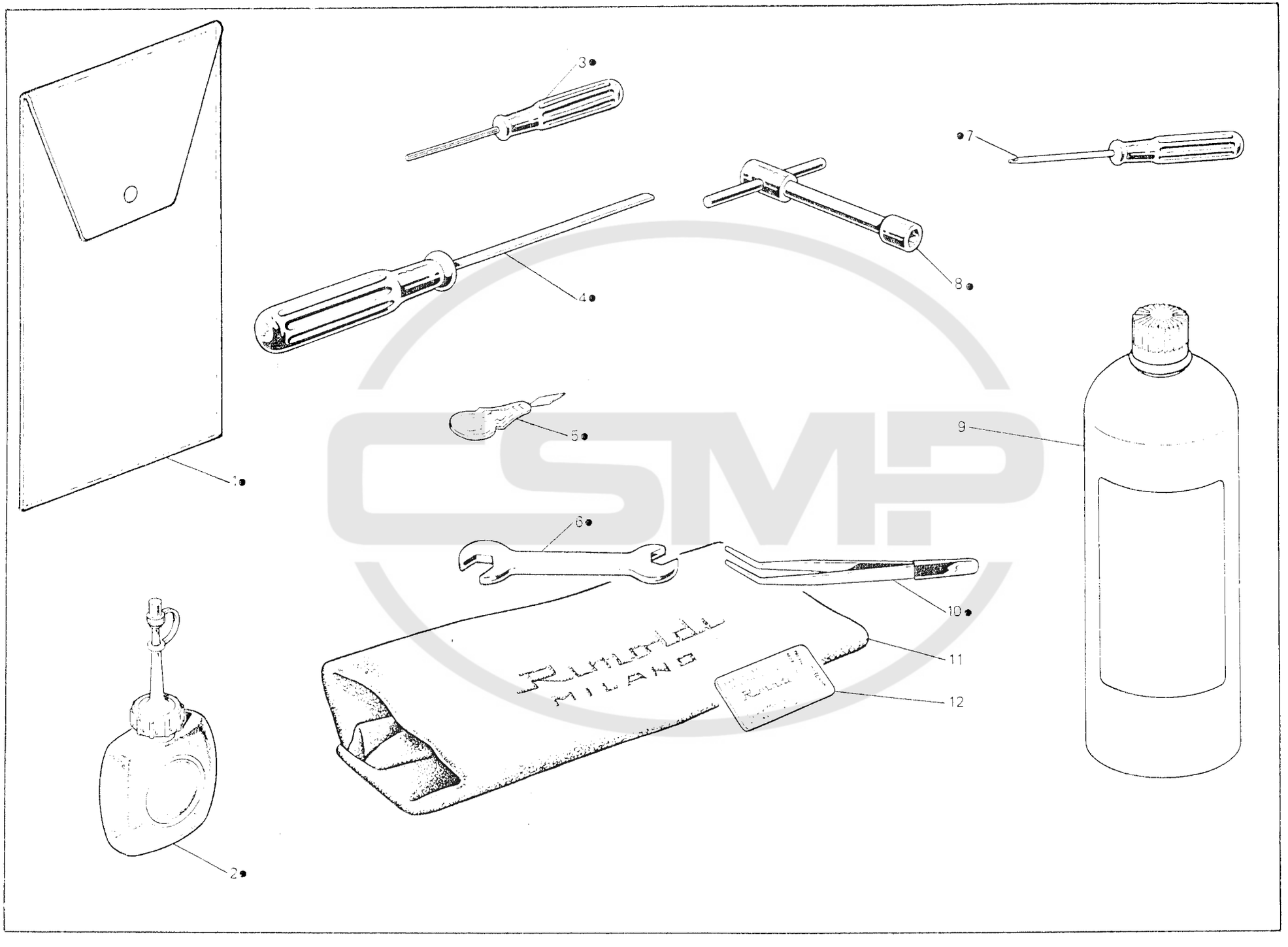

CSMP

Fig. N Abb. N	Part N Piece N. Bestell N Pieza N	Qt Anzahl	DESCRIZIONE	DESCRIPTION	DESCRIPTION	BENENNUNG	DESCRIPCION
●	991408-4-02	1	busta accessori completa	accessories envelope assembly	envelope accessoires complète		
1	991415-0-00	1	busta accessori	accessories envelope	envelope accessoires		
2	990175-0-10	1	oliatore	oiler	graisseur		
3	990474-0-11	1	chiave esagonale da 1,5 mm	1,5 mm hexagonal key	clé hexagonale de 1,5 mm		
4	990723-0-00	1	cacciavite medio	screw-driver	tournevis moyen		
5	990188-0-10	1	infila aghi	needles threading	enfiles,aiguilles		
6	990193-0-00	1	chiave da 5-7 mm	5-7 mm key	clé de 5-7 mm		
7	990069-0-00	1	cacciavite piccolo	screw driver	petite tournevis		
8	990587-0-11	1	chiave a tubo da 9 mm	9 mm key	clé à tube de 9 mm		
9	991280-0-00	1	lattina olio	oil container	bidon huile de		
10	990176-0-10	1	pinza per infilatura	threading tweezers	pince pour enfilage		
11	990578-0-13	1	cuffia protez. macchina	machine cover	couverture protection machine		
12	★	1	bustina aghi	needles packet	paquette aiguilles		
			★ per l'ordinazione della bustina citare lo stesso simbolo dell'ago montato sulla testa	★ to order packet of needles please specify symbol of needle fitted on machine	★ pour commander un sachet d'aiguille donner le symbol de l'aiguile montée sur la tête		

CSMP

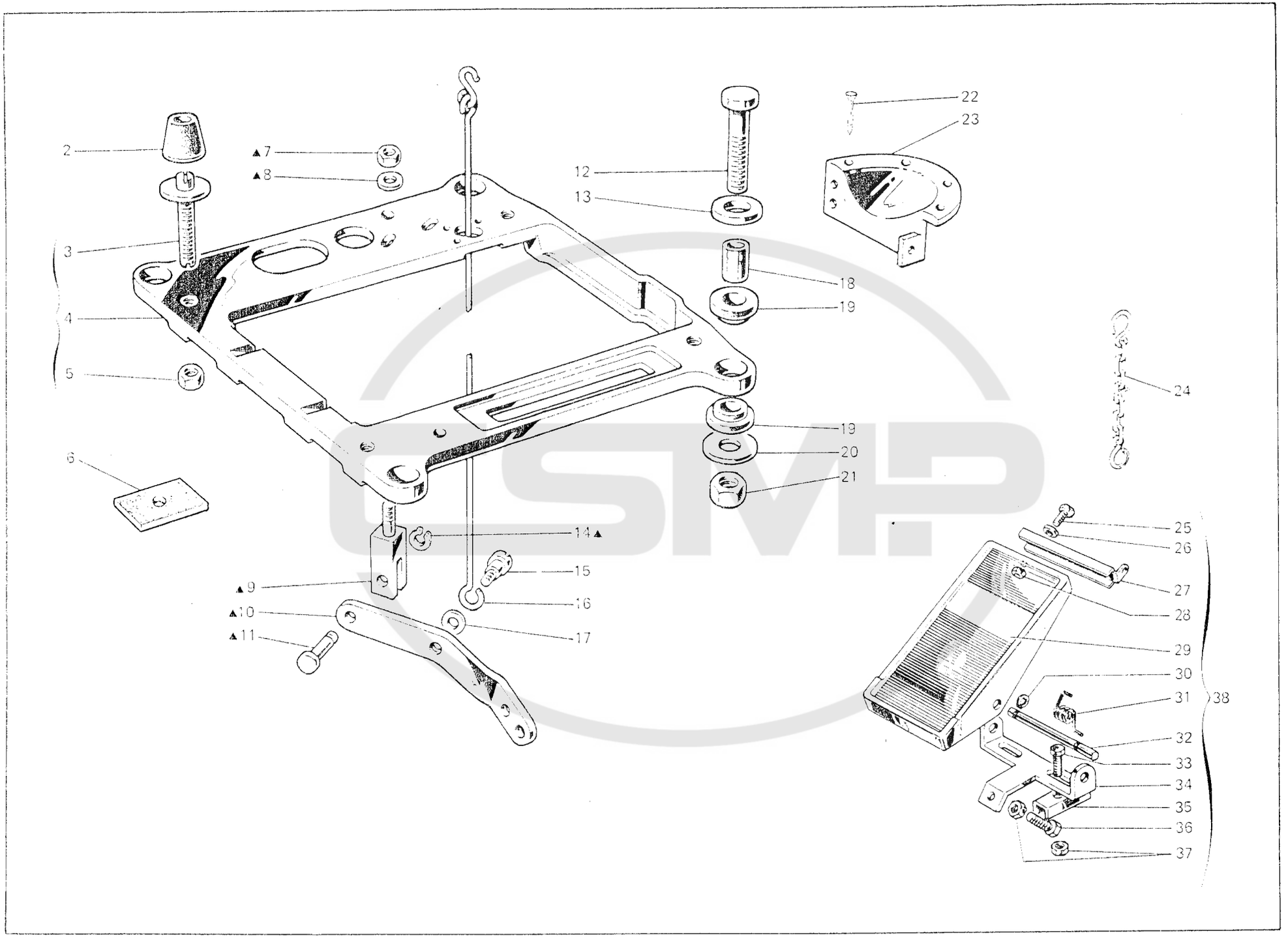
2
▲7
▲8
3
4
5
6
12
13
18
19
19
20
21
22
23
24
14▲
15
16
17
▲9
▲10
▲11
25
26
27
28
29
30
31
32
33
34
35
36
37
38

Fig. N. Abb. N.	Part. N. Bestell N. Piece N. Pieza N.	Qt. Anzahl	DESCRIZIONE	DESCRIPTION	DESCRIPTION	BENENNUNG	DESCRIPCION
			PIAZZAMENTO NORMALE	NORMAL SETTING	INSTALLATION NORMAL		
▲	991253-4-00	1	supporto testa completo	head support assembly	support tête complet		
1	991251-4-00	1	supporto testa con perno	head support with pin	support tête avec pivot		
2	990982-0-00	4	ammortizzatore	shock absorber	amortisseur		
3	900694-0-11	4	perno	pin	pivot		
4	991250-0-00	1	supporto testa	head support	support tête		
5	733008-2-00	4	dado	nut	écrou		
6	900203-0-10	4	ammortizzatore per tavola	shock absorber	amortisseur pour table		
7	746409-2-00	1	dado	nut	écrou		
8	704316-2-00	1	rondella	washer	rondelle		
9	991256-0-00	1	supportino per leva	support for lever	support pour levier		
10	991255-0-00	1	leva	lever	levier		
11	991257-0-00	1	perno	pin	pivot		
12	722905-2-00	4	vite	screw	vis		
13	704346-2-00	4	rondella	washer	rondelle		
14	700208-0-00	1	anello elastico	spring ring	anneau ressort		
15	743541-2-00	1	vite	screw	vis		
16	991259-3-00	1	tirante	tie-rod	tirant		
17	704310-2-00	1	rondella	washer	rondelle		
18	901102-0-00	4	distanziale	spacer	entretoise		
19	901101-0-00	8	ammortizzatore	shock absorber	amortisseur		
20	704345-2-00	4	rondella	washer	rondelle		
21	733813-0-00	4	dado	nut	écrou		
22	900201-0-10	7	chiodini	rivets	clous		
23	990317-0-10	1	protezione volantino	handwheel protection	protection volant		
24	990179-4-1,1	1	catenella	chain	chaînette		
25	720464-4-00	2	vite	screw	vis		
26	704009-4-00	2	rondella	washer	rondelle		
27	900926-0-00	1	attacco	coupling	raccord		
28	733508-4-00	2	dado	nut	écrou		
29	900931-0-00	1	copertura	covering	couverture		
30	900918-0-00	2	anello elastico	spring ring	anneau ressort		
31	900927-0-00	1	molla	spring	ressort		
32	900928-0-00	1	perno	pin	pivot		
33	720505-4-00	2	vite	screw	vis		
34	900929-0-01	1	supporto	support	support		
35	900920-0-00	2	piastrina	plate	plaquette		
36	720545-4-00	1	vite	screw	vis		
37	733510-4-00	3	dado	nut	écrou		
38	900925-4-01	1	pedalina completa	pedal assembly	pédale complète		

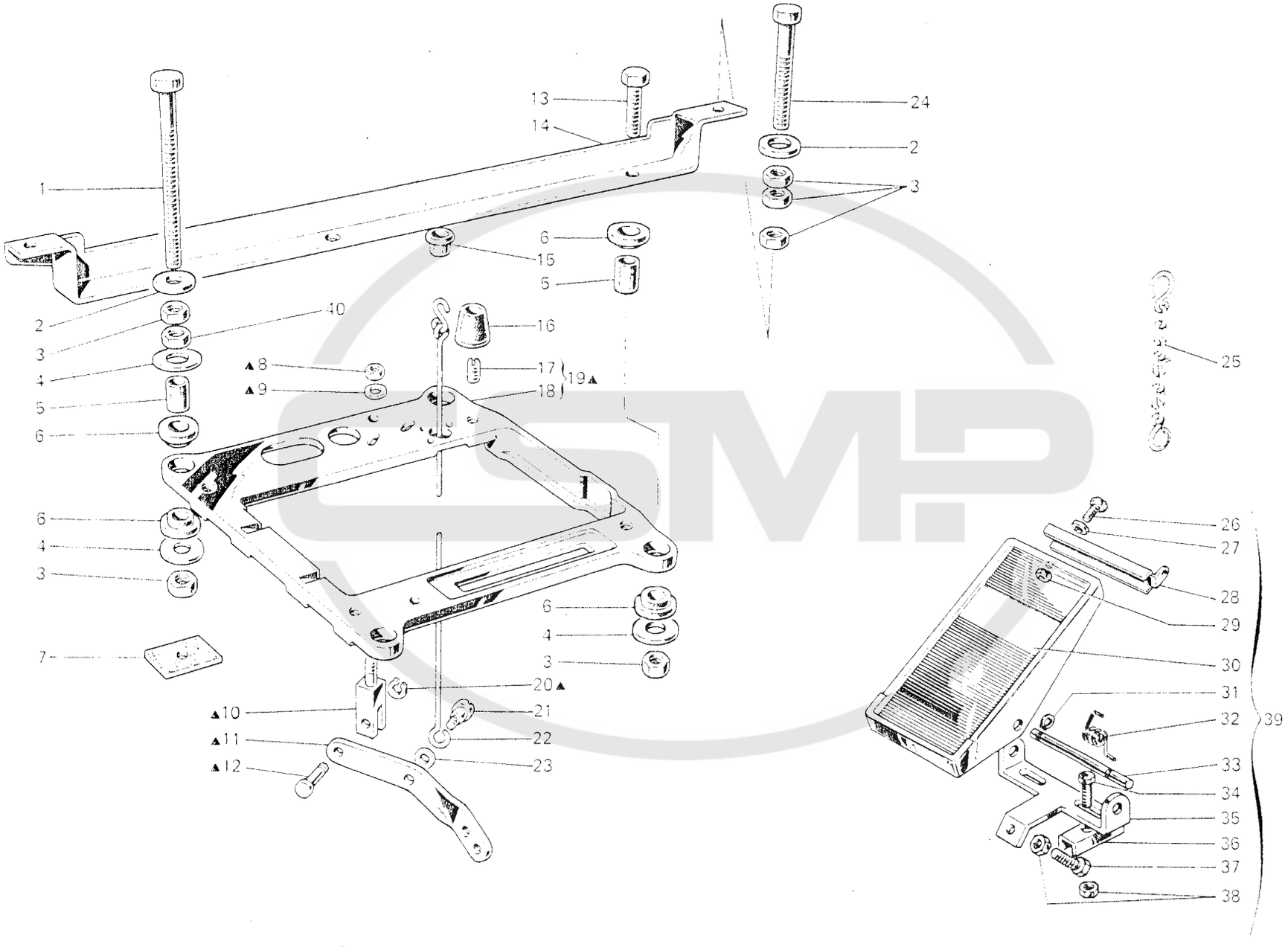
1
2
3
4
5
6
7
▲8
▲9
▲10
▲11
▲12
13
14
15
16
17
18
19▲
20▲
21
22
23
24
25
26
27
28
29
30
31
32
33
34
35
36
37
38
39
40

Fig. N. Abb N	Part. N. Piece N. Bestell N. Pieza N.	Qt. Anzahl	DESCRIZIONE	DESCRIPTION	DESCRIPTION	BENENNUNG	DESCRIPCION
			PIAZZAMENTO INCASSATO	SUBMERGED SETTING	INSTALLATION ENCASTREE		
A	991254-4-00	1	supporto testa completo	head support assembly	support tête complet		
1	722920-2-00	2	vite	screw	vis		
2	704346-2-00	4	rondella	washer	rondelle		
3	733813-0-00	10	dado	nut	écrou		
4	704345-2-00	6	rondella	washer	rondelle		
5	901102-0-00	4	distanziale	spacer	entretoise		
6	901101-0-00	8	ammortizzatore	shock absorber	amortisseur		
7	900203-0-10	4	ammortizzatore per tavola	shock absorber	amortisseur pour table		
8	746409-2-00	1	dado	nut	écrou		
9	704316-2-00	1	rondella	washer	rondelle		
10	991256-0-00	1	supportino per leva	support for lever	support pour levier		
11	991255-0-00	1	leva	lever	levier		
12	991257-0-00	1	perno	pin	pivot		
13	720546-0-00	2	vite	screw	vis		
14	901251-2-00	1	staffa	bracket	bride		
15	900204-0-10	1	bussola	bush	bague		
16	990982-0-00	4	ammortizzatore	shock absorber	amortisseur		
17	901253-0-00	4	vite	screw	vis		
18	991250-0-00	1	supporto testa	head support	support tête		
19	991252-4-00	1	supporto testa con viti	head support with screws	support tête avec vis		
20	700208-0-00	1	anello elastico	spring ring	anneau ressort		
21	743541-2-00	1	vite	screw	vis		
22	991259-3-00	1	tirante	tie-rod	tirant		
23	704310-2-00	1	rondella	washer	rondelle		
24	722907-2-00	2	vite	screw	vis		
25	990179-4-11	1	catenella	chain	chaînette		
26	720464-4-00	2	vite	screw	vis		
27	704009-4-00	2	rondella	washer	rondelle		
28	900926-0-00	1	attacco	coupling	raccord		
29	733508-4-00	2	dado	nut	écrou		
30	900931-0-00	1	copertura	covering	couverture		
31	900918-0-00	2	anello elastico	spring ring	anneau ressort		
32	900927-0-00	1	molla	spring	ressort		
33	900928-0-00	1	perno	pin	pivot		
34	720505-4-00	2	vite	screw	vis		
35	900929-0-01	1	supporto	support	support		
36	900920-0-00	2	piastrina	plate	plaquette		
37	720545-4-00	1	vite	screw	vis		
38	733510-4-00	3	dado	nut	écrou		
39	900925-4-01	1	pedalina completa	pedal assembly	pédale complète		
40	733008-2-00	4	dado	nut	écrou		

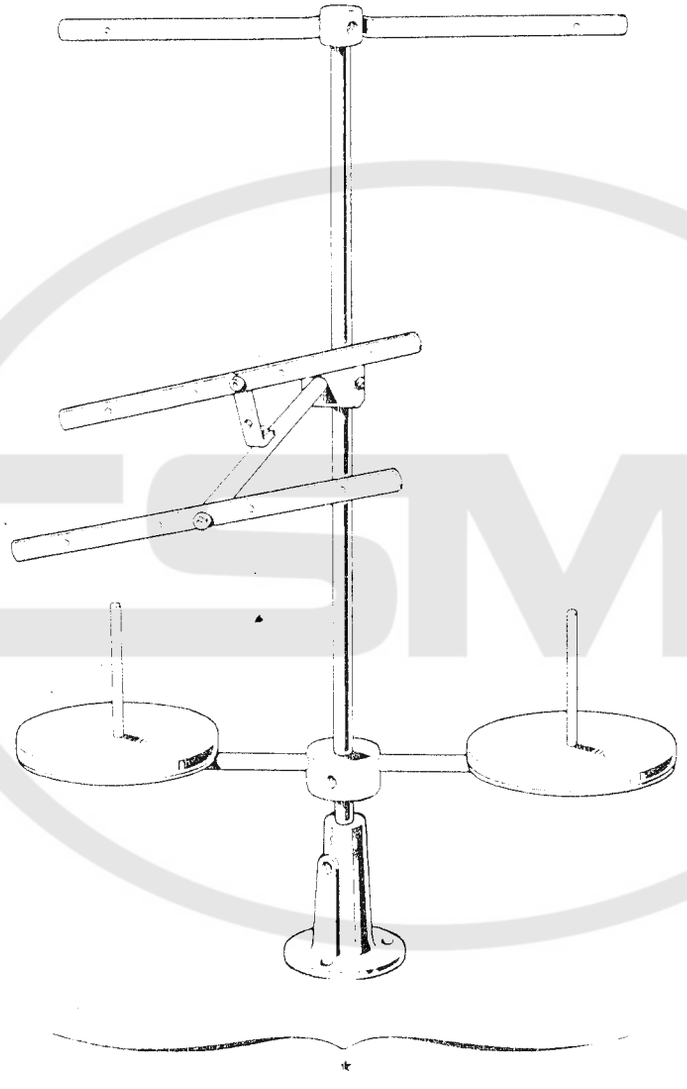

CSMP

Fig. N. Abb. N.	Part N. Piece N. Bestell N. Pieza N.	Qt. Anzahl	DESCRIZIONE	DESCRIPTION	DESCRIPTION	BENENNUNG	DESCRIPCION
★	991100-5-01	1	porta bobine compl.(1-2 fili)	bobbin carrier assembly	porte bobine complet		

CSMP

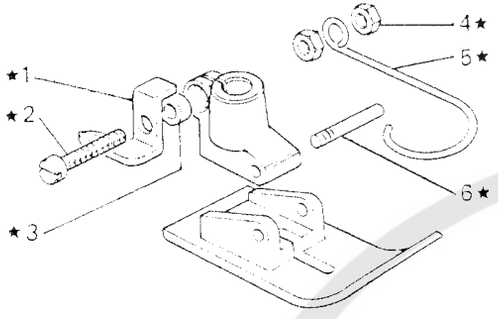
★1
★2
★3
4★
5★
6★

9

10

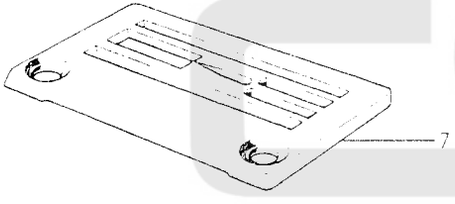
7

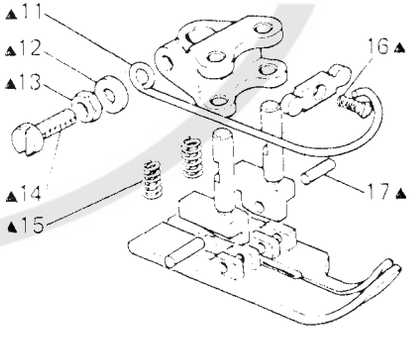
▲11
▲12
▲13
▲14
▲15
16▲
17▲

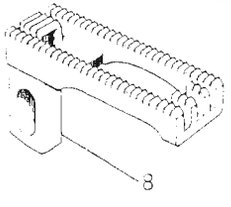
8

Fig. N. Abb. N.	Part. N. Piece N. Beste N. Pieza N.	Qt. Anzahl	DESCRIZIONE	DESCRIPTION	DESCRIPTION	BENENNUNG	DESCRIPCION
★	306665-3-01	1	piedino completo	presserfoot assembly	pied-presseur complet		
1	303442-0-11	1	taglia catenella	chain cutting	coupe-chaînette		
2	741791-2-00	1	vite	screw	vis		
3	303504-0-10	1	distanziale	spacer	entretoise		
4	733504-2-00	2	dado	nut	écrou		
5	990808-0-01	1	salvadita	protection	protection		
6	300873-0-12	1	spina filettata	pin	goupille		
7	303869-0-10	1	placca ago	needle plate	plaque à aiguille		
8	303860-0-10	1	griffa	feed dog	griffe		
9	305599-0-00	1	crochet inferiore	lower looper	crochet inférieur		
10	780200-0-40	1	targhetta classe testa	head class plate	plaque classe tête		
			SOLO A RICHIESTA	ONLY ON REQUEST	SEULEMENT SUR DEMANDE		
▲	306666-3-01	1	piedino completo	presserfoot assembly	pied-presseur complet		
7	303902-0-10	1	placca ago	needle plate	plaque à aiguille		
	303907-0-10	1	placca ago	needle plate	plaque à aiguille		
8	303892-0-10	1	griffa	feed dog	griffe		
11	990802-0-00	1	salvadita	protection	protection		
12	704213-2-00	1	rondella	washer	rondelle		
13	733002-2-00	1	dado	nut	écrou		
14	742050-2-00	1	vite	screw	vis		
15	304809-0-10	2	molla	spring	ressort		
16	304807-0-11	1	vite	screw	vis		
17	200469-0-10	2	spina	pin	goupille		

CSMP

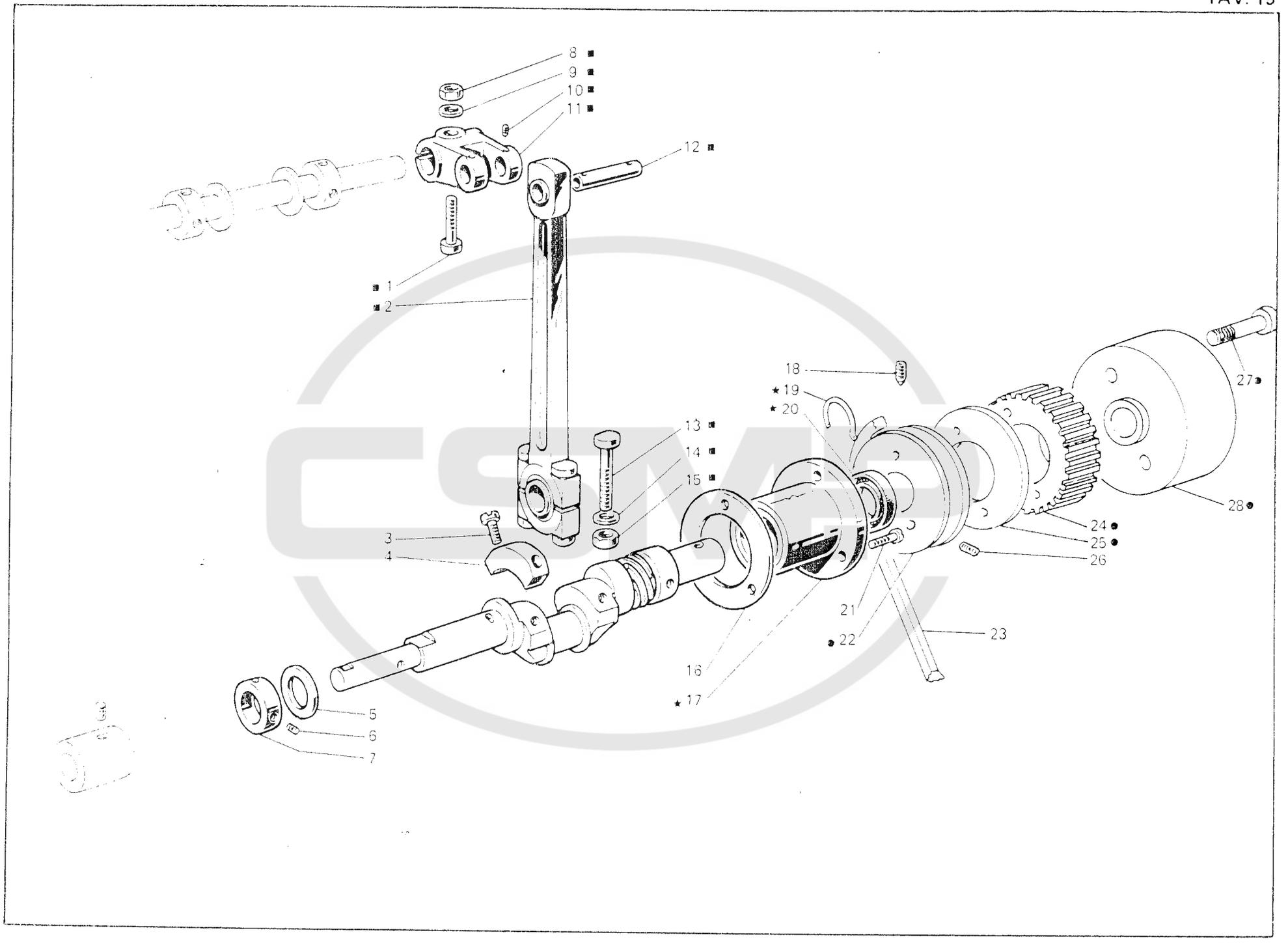
8 ■
9 ■
10 ■
11 ■
12 ■
■ 1
■ 2
18
★ 19
★ 20
13 ■
14 ■
15 ■
27 ●
28 ●
24 ●
25 ●
26
3
4
21
● 22
23
16
★ 17
5
6
7

Fig. N. Abb. N.	Part. N. Pièce N. Bestell N. Pieza N.	Qt. Anzahl	DESCRIZIONE	DESCRIPTION	DESCRIPTION	BENENNUNG	DESCRIPCION
★	308013-4-02	1	bussola destra completa	right bush assembly	bague droite complète		
■	308178-4-01	1	gruppo biella principale	main con-rod assembly	groupe bielle principale		
●	930844-4-00	1	volantino con puleggia compl.	handwheel with pulley assembly	volant avec poulie complet		
1	308855-0-00	1	vite	screw	vis		
2	308174-3-01	1	biella principale completa	main con-rod assembly	bielle principale complète		
3	741056-0-00	4	vite	screw	vis		
4	302272-0-10	2	settore	sector	secteur		
5	704869-0-00	1	rondella	washer	rondelle		
6	745815-2-00	2	vite	screw	vis		
7	308084-2-00	1	anello di registro con viti	adjustment ring with screw	bague de réglage avec vis		
8	746408-2-00	1	dado	nut	écrou		
9	705013-0-00	1	rondella	washer	rondelle		
10	745812-2-00	2	vite	screw	vis		
11	308159-2-01	1	manovella	crank	manivelle		
12	308166-0-00	1	perno	pin	pivot		
13	308161-0-00	2	vite	screw	vis		
14	308149-0-01	2	rondella	washer	rondelle		
15	308162-0-00	2	dado	nut	écrou		
16	308127-0-00	1	guarnizione	gasket	garniture		
17	308012-2-10	1	bussola	bush	bague		
18	730054-2-00	1	vite per volantino	screw for handwheel	vis pour volant		
19	308389-0-00	1	anello elastico	spring ring	anneau ressort		
20	700596-0-00	1	anello di tenuta	retainer ring	bague d'étanchéité		
21	742222-2-00	3	vite	screw	vis		
22	308197-0-00	1	puleggia	pulley	poulie		
23	770012-0-00	1	cinghia	belt	courroie		
24	930676-0-00	1	puleggia	pulley	poulie		
25	930846-0-00	1	disco	disc	disque		
26	729044-2-00	1	vite	screw	vis		
27	722481-2-00	3	vite	screw	vis		
28	930675-0-00	1	volantino	handwheel	volant		

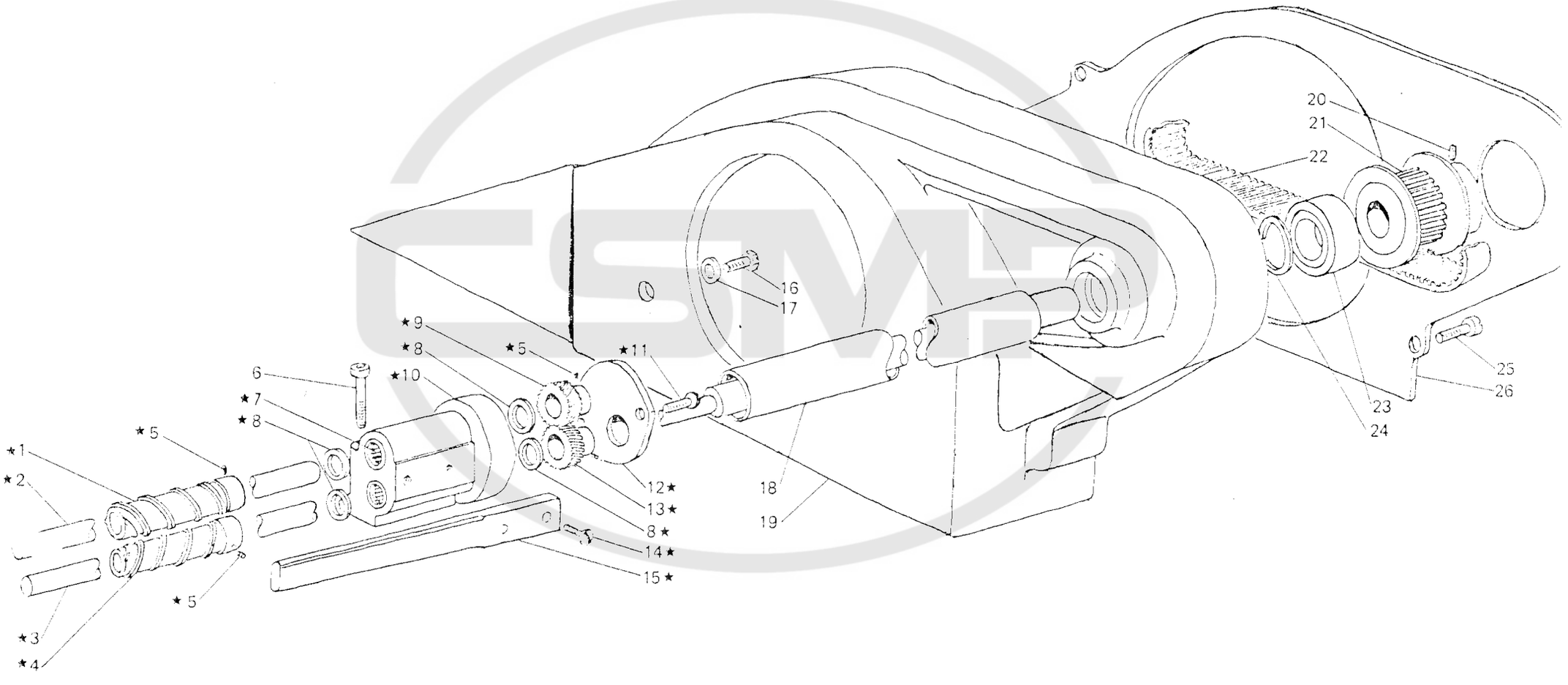
★1
★2
★3
★4
★5
★5
★5
6
★7
★8
★8
★9
★10
★11
12★
13★
8★
14★
15★
16
17
18
19
20
21
22
23
24
25
26

Fig. N. Abb. N.	Part. N. Piece N. Bestell N. Pieza N.	Qt. Anzahl	DESCRIZIONE	DESCRIPTION	DESCRIPTION	BENENNUNG	DESCRIPCION
★	930848-4-00	1	gruppo stenditore completo	layer assembly	groupe pour matelasser		
1	930661-0-00	1	rullo superiore	upper roller	rouleau supérieur		
2	930663-0-00	1	perno	pin	pivot		
3	930850-0-00	1	albero	shaft	arbre		
4	930660-0-00	1	rullo inferiore	lower roller	rouleau inférieur		
5	745800-2-00	8	vite	screw	vis		
6	722512-2-00	2	vite	screw	vis		
7	930656-0-00	4	gabbia a rullini	needles cage	cage à aiguilles		
8	704813-0-00	4	rondella	washer	rondelle		
9	930688-0-00	1	ingranaggio condotto	gear	engrenage		
10	930657-2-00	1	supporto con gabbia a rullini	support	support		
11	724442-0-00	2	vite	screw	vis		
12	930692-2-00	1	coperchio	cover	couvercle		
13	930659-0-00	1	ingranaggio conduttore	gear	engrenage		
14	300483-0-10	2	vite	screw	vis		
15	930664-0-00	1	piastrina	plate	plaque		
16	740267-0-00	2	vite	screw	vis		
17	704412-0-00	2	rondella	washer	rondelle		
18	930690-0-00	1	tubo di protezione	protection pipe	tube de protection		
19	930841-2-00	1	supporto destro completo	right support assembly	support droit complet		
20	729013-2-00	2	vite	screw	vis		
21	930847-0-00	1	puleggia dentata	toothed pulley	poulie dentée		
22	930667-0-00	1	cinghia	belt	courroie		
23	930842-0-00	1	cuscinetto	bearing	coussinet		
24	930843-0-00	1	anello di spallamento	ring	anneau		
25	723266-2-00	4	vite	screw	vis		
26	930691-0-00	1	coperchio	cover	couvercle		

CSMP

Fig. N. Abb. N	Part. N. Piece N. Bestell N. Pieza N.	Qt. Anzahl	DESCRIZIONE	DESCRIPTION	DESCRIPTION	BENENNUNG	DESCRIPCION
*	305163-3-00	1	piedino completo	presserfoot assembly	pied-presseur complet		
*	930852-4-00	1	gruppo frenaggio completo	brake assembly	groupe freinage complet		
1	303504-0-10	1	distanziale	spacer	entretoise		
2	303442-0-11	1	taglia catenella	chain cutting	coupe-chaînette		
3	741791-2-00	1	vite	screw	vis		
4	733504-2-00	2	dado	nut	écrou		
5	990808-0-00	1	salvadita	protection	protection		
6	305165-0-00	1	placca ago	needle plate	plaque à aiguille		
7	305164-0-00	1	griffa	feed dog	griffe		
8	303868-0-10	1	crochet inferiore	lower looper	crochet inféreur		
9	785368-0-40	1	targhetta classe testa	head class plate	plaque classe tête		
10	930845-0-00	2	molla	spring	ressort		
11	201162-0-10	2	pomolo	knob	pommeau		
12	930857-0-00	1	piastrina superiore	upper plate	plaque supérieure		
13	930859-2-00	1	piastrina inferiore	lower plate	plaque inférieure		
14	930856-2-00	1	piastrina supporto	plate support	plaque support		
15	721475-2-00	2	vite	screw	vis		

CSMP

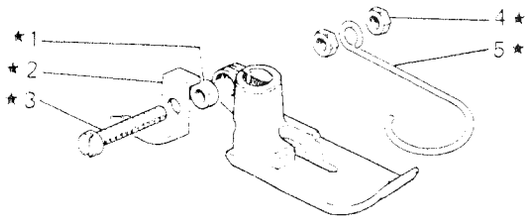
★1
★2
★3
4★
5★

8

9

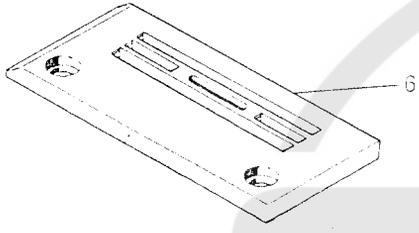
6

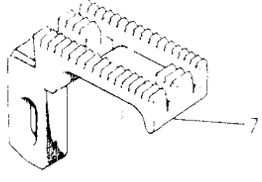
7

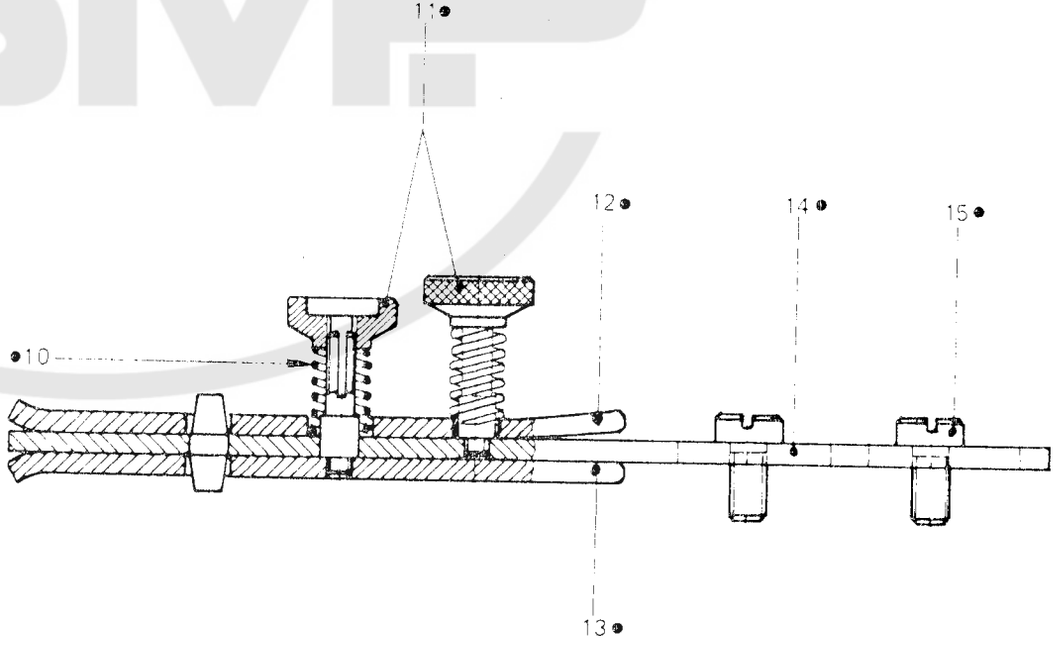
11●
12●
14●
15●
●10
13●