JUKI®

No.0230-01
1984・10
BE122P20PJA

model MOL-122P・122P-B

ベルトループ自動縫付けミシン

Fully Automatic Belt-loop Attaching Machine

PARTS BOOK

CSMP

TOKYO JUKI INDUSTRIAL CO., LTD.

HOW TO MAKE USE OF THIS PARTS BOOK
パーツブックの見方

1. The part numbers of parts shown in the figure indicate the corresponding numbers (Ref. No.) shown by the Index.
   図に示された部品の品番は、図にふられているNo(Ref No)に対応するインデックスによって、その品番がわかります。

2. Explanation of codes
   記号の説明

   1) Codes on the "Note" column
      "注記" 欄の記号

      ① ☆..... means this part is changed from the previous parts book.
      前回のパーツブックに対して今回変更された部品を意味します。

      ② #01..... refer to the "Note" explanation at bottom of page.
      ◇01 ページ下の "注記" の説明を参照して下さい。

   2) Codes on the "E.C. (Engineering change)" column
      "変更年月" 欄の記号

      ① A.10/83.... Added from October, 1983
      1983年10月より追加された。

      ② D.10/83.... Obsoleted from October, 1983
      1983年10月より削除された。

      ③ When previous parts (Obsoleted part) and new parts (Added parts) are not interchangeable with each other:
      部品の互換性かない変更の場合

      In this case, even obsoleted part (D.) can be ordered with the obsoleted part number, so select the parts with changed dates and place your orders.
      この場合は削除(D)された品番でもご注文できますから、変更年月により、いずれかの部品を選択してご注文下さい。

      Example (例)

Ref. No.	Note 注記	Part No. 品番	Description	E.C. 変更年月	品名	Amt. Req. 数量
1	☆	B1401-100-000	Needle bar	D.10/83	ハリボー	—
1-1	☆	B1401-100-000-A	Needle bar	A.10/83	ハリボー	1
2	☆	B1105-200-000	Frame cover	D.10/83	B1105-300-000	—
	☆	B1105-300-000	Frame cover	A.10/83	フレームカバー	1

      ④ In case when previous parts and new part are interchangeable with each other:
      部品の互換性がある場合の変更

      In this case the new part number is replaced on the " 品名 (Japanese)" column of the previous parts, so please order by the new part number.
      この場合は、旧部品の和文品名欄にそれにかわる新しい品番が記入してありますので、新しい品番でご注文下さい。

      ⑤ C.10/83

1	☆	B1105-500-000	Frame cover	C.10/83	~~B1105-600-000~~	1
		Correct No. 正しい品番			Wrong No. 誤まり品番	

      Please order by the correct part number.
      正しい品番でご注文下さい。

      ⑥ M.10/83 ..... The amount required is changed from October, 1983
      The new amount required is shown in the "Amt. Req". column.
      1983年10月より数量が変更になった。この場合数量欄には新しい数量が表示してあります。

   3) Codes on the "Amt. Req." column
      "数量" 欄の記号

      ① 2 ..... Indicates amount required is 2.
      数量、2個を表わします。

      ② 2.0 ..... Indicates length in meters. (unit is meter)
      長さ、2メートルを表わします。(単位はメートルです)

      ③ — ..... Indicates parts obsoleted from the parts book.
      このパーツブックから削除された部品です。

      ④ (1)..... Indicates sub parts which construct the assembly part.
      Assembly part is shown as "asm." and クミ in Japanese, in the "Description" column.
      組部品を構成している子部品を表わします。組部品は品名欄に英文で "asm." 和文でクミと表示してあります。

When Ordering The Spare Parts:

In order to ensure that we deliver the correct parts to you, please clearly state when ordering the corresponding PART NUMBER (ex. B1109-012-A00) and also the PARTS BOOK NUMBER (ex. 0010-01, given at the top right of the cover) or the MACHINE SERIAL NUMBER, because there are some parts which have been changed.

補用部品注文の際のご注意

このパーツブックに記載されている補用部品をご注文の際は、部品の番号(例えば、B1109-012-A00)でご注文下さい。合わせて、ご覧のパーツブックの管理番号(表紙右上、例えば、No.0010-01)又は、機械番号をご連絡頂ければ幸いです。又、改良のため部品の一部が変更になる場合がありますのでご了承下さい。

CONTENTS
目　　次

1. FRAME & MISCELLANEOUS COVER COMPONENTS (1) 1
頭部外装関係（１）
2. FRAME & MISCELLANEOUS COVER COMPONENTS (2) 3
頭部外装関係（２）
3. MAIN SHAFT & NEEDLE BAR COMPONENTS 5
上軸、針棒関係
4. HOOK SHAFT & VERTICAL HOOK COMPONENTS 7
下軸、水平釜関係
5. FEED CAM COMPONENTS 9
布送りカム関係
6. CLOTH FEED COMPONENTS 11
布送り関係
7. KNIFE & THREAD POSITIONER COMPONENTS (1) 13
ナイフ、糸きばき関係（１）
8. KNIFE & THREAD POSITIONER COMPONENTS (2) 15
ナイフ、糸きばき関係（２）
9. THREAD TENSION COMPONENTS 17
糸張力関係
10. BOBBIN WINDER COMPONENTS 19
糸巻装置関係
11. BELT-LOOP RECEIVER COMPONENTS 20
ベルトループ受け関係
12. BELT-LOOP SUPPLY COMPONENTS (1) 21
ベルトループ供給関係（１）
13. BELT-LOOP SUPPLY COMPONENTS (2) 22
ベルトループ供給関係（２）
14. BELT-LOOP FOLD COMPONENTS 23
ベルトループ折り曲げ関係
15. BELT-LOOP FEED COMPONENTES 25
ベルトループ送り出し関係
16. BELT-LOOP SUPPLY BASE COMPONENTS 26
ベルトループ供給土台関係
17. JOINTED BELT-LOOP DETECT COMPONENTS 27
ベルトループ継ぎ目検出関係
18. CONTROL BOX COMPONENTS 28
制御ボックス関係
19. TABLE COMPONENTS 29
テーブル関係
20. SOLENOID VALVE COMPONENTS 31
電磁弁関係
21. PRINTED CIRCUIT BOARD COMPONENTS (1) 33
基板関係（１）
22. PRINTED CIRCUIT BOARD COMPONENTS (2) 35
基板関係（２）
23. CORD COMPONENTS 36
コード関係
24. ACCESSORIES COMPONENTS 37
付属品関係
25. EXCLUSIVE PARTS FOR MOL-122P-B (1) 39
MOL-122P-B専用部品（１）
26. EXCLUSIVE PARTS FOR MOL-122P-B (2) 41
MOL-122P-B専用部品（２）
NUMERICAL INDEX OF PARTS 43
索引

1. FRAME & MISCELLANEOUS COVER COMPONENTS (1)
頭部外装関係(1)

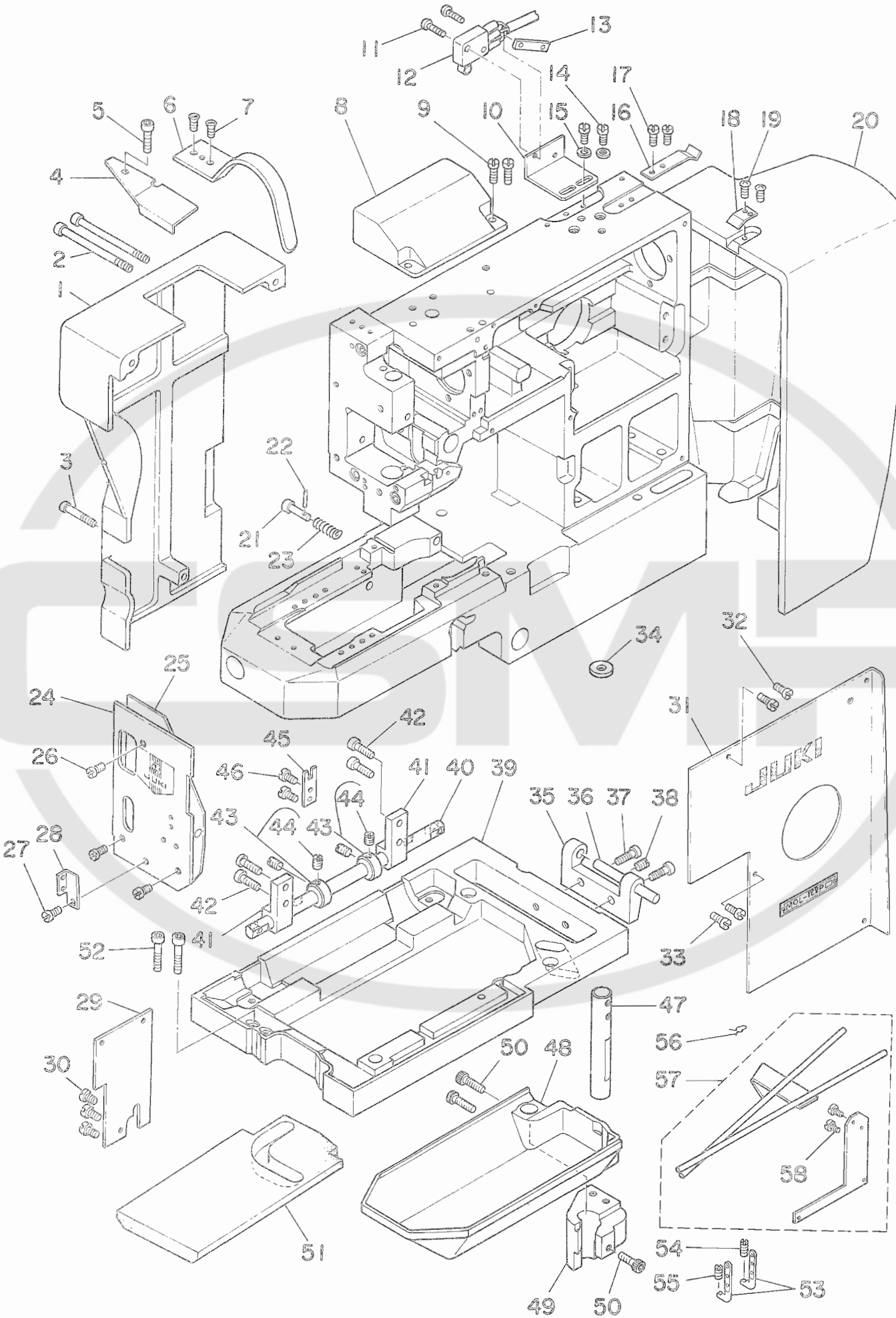

Ref. No.	Note 注記	Part No. 品番	Description	E. C. 変更年月	品名	Amt. Req. 数量
1		G1123-122-000	CAM COVER		カムカバー	1
2		SM-6058052-CP	SCREW M5 L=30		ロツカクアナボルト	2
3		SM-6053202-TP	SCREW M5X0.8 L=32		ロツカクアナボルト M5X0.8 L=32	1
4		G1411-122-000	NEEDLE BAR BUSHING COVER		ハリボーメタル ウワカバー	1
5		G5009-100-000	SCREW		トメネジ	1
6		G1119-122-000	THREAD TAKE-UP LEVER COVER		テンビンカバー	1
7		SS-1090750-SP	SCREW 9/64-40 L=7		シタメストリツケネジ	2
8		G1116-122-000	SWITCH COVER		テイシスイツチ カバー	1
9		SS-6111010-SP	SCREW 11/64-40 L= 9.5		ヒラネジ 11/64-40 L=9.5	2
10		G1117-122-000	SWITCH INSTALLING PLATE		テイシSW カバトダイ	1
11		SM-4061601-SC	SCREW M2.6 L=16		ナベコネジ M2.6 L=16	2
12		G5051-500-000	MICROSWITCH		スイツチ	1
13		G5089-100-000	MICROSWITCH NUT PLATE		マイクロスイツチ ナツトイタ	1
14		SS-6111010-SP	SCREW 11/64-40 L= 9.5		ヒラネジ 11/64-40 L=9.5	2
15		WP-0450801-SD	WASHER 4.5X10.0X0.8		ヒラザカネ 4.5X10X0.8	2
16		G1126-122-000	SPRING PLATE		ウシロカバー バネイタ	1
17		SS-6111010-SP	SCREW 11/64-40 L= 9.5		ヒラネジ 11/64-40 L=9.5	2
18		G1127-122-000	SPRING PLATE RECEIVER		ウシロカバー バネウケイタ	1
19		SS-4080610-SP	SCREW 1/8-44 L=6.4		ナベネジ 1/8-44 L=6.4	2
20		G1113-122-000	REAR COVER		ウシロカバー A	1
21		G1303-122-000	SAFETY DEVICE PUSHBUTTON		アンセンソーチ オシボタン	1
22		PS-0200122-KH	SPRING PIN 2.0X12		スプリングピン 2.0X12	1
23		G1304-122-000	SPRING		オシボタンバネ	1
24		G1109-122-000	FACE PLATE		メイイタカバー	1
25		G1112-122-000	FACE PLATE GASKET		メンイタ パツキング	1
26		SS-6111010-SP	SCREW 11/64-40 L= 9.5		ヒラネジ 11/64-40 L=9.5	3
27		SS-7111410-SP	SCREW 11/64-40 L=14		マルヒラネジ 11/64-40 L=14	1
28		G1144-122-000	SAFETY PLATE INSTALLING PLATE		アイカード トリツケイタ	1
29		G1110-122-000	FRONT COVER, LEFT		トーフヒダリ マエカバー	1
30		SS-7090710-SL	SCREW 9/64-40 L=6.8		マルヒラネジ 9/64-40 L=6.8	3
31		G1111-122-000	ARM COVER		アームカバー	1
32		G5009-100-000	SCREW		トメネジ	2
33		SS-7090710-SL	SCREW 9/64-40 L=6.8		マルヒラネジ 9/64-40 L=6.8	2
34		G1129-122-000	GASKET		オイルドレイン パツキン	1
35		G1114-122-000	HINGE BLOCK		カイヘイトダイ	1
36		G1115-122-000	HINGE BLOCK SHAFT		カイヘイトダイ シク	1
37		SM-6062002-TP	SCREW M6 L=20		ロツカクアナボルト M6 L=20	2
38		SS-8150510-SP	SCREW 15/64-28 L=5		トメネジ	2
39		G1103-122-000	MACHINE BASE		ベツト トリツケトダイ	1
40		G1104-122-000	MACHINE BASE SHAFT		トリツケトダイ シク	1
41		G1105-122-000	MACHINE BASE SHAFT BRACKET		シクウケカネ	2
42		SM-6062002-TP	SCREW M6 L=20		ロツカクアナボルト M6 L=20	4
43		G1106-122-CA0	COLLAR ASM.		シヤフトウケカネ カラー クミ	2
44		SS-8150510-SP	SCREW 15/64-28 L=5		トメネジ	(4)
45		G1107-122-000	MACHINE BASE HOOK		トリツケトダイ フツク	1
46		SS-6111010-SP	SCREW 11/64-40 L= 9.5		ヒラネジ 11/64-40 L=9.5	2
47		G1121-122-000	OIL PAN SHAFT		オイルパン ジヨウケシク	1
48		G1120-122-000	OIL PAN		オイルパン	1
49		G1122-122-000	OIL PAN SHAFT BRACKET		オイルパン ジヨウケメタル	1
50		SM-6062002-TP	SCREW M6 L=20		ロツカクアナボルト M6 L=20	3
51		G1128-122-000	OIL PAD		オイルパン ウレタンホーム	1
52		SM-6063012-CP	SCREW M6 L=30		ロツカクアナボルト M6 L=30	2
53		G1147-122-000	THREE HOLE THREAD EYELET		ミツメイトカケ	2
54		SS-8151350-SP	SCREW 15/64-28 L=13.0		トメネジ 15/64-28 L=13	1
55		SS-8150810-SP	SCREW 15/64-28 L=8		トメネジ 15/64-28 L=7.5	1
56		G3141-122-000	GUIDE		パイプイトアンナイガイド	2
57		G3139-122-0A0	THREAD GUIDE PIPE ASM.		パイプイトアンナイ	1
58		SS-6111010-SP	SCREW 11/64-40 L= 9.5		ヒラネジ 11/64-40 L=9.5	(2)

2. FRAME & MISCELLANEOUS COVER COMPONENTS (2)
頭部外装関係(2)

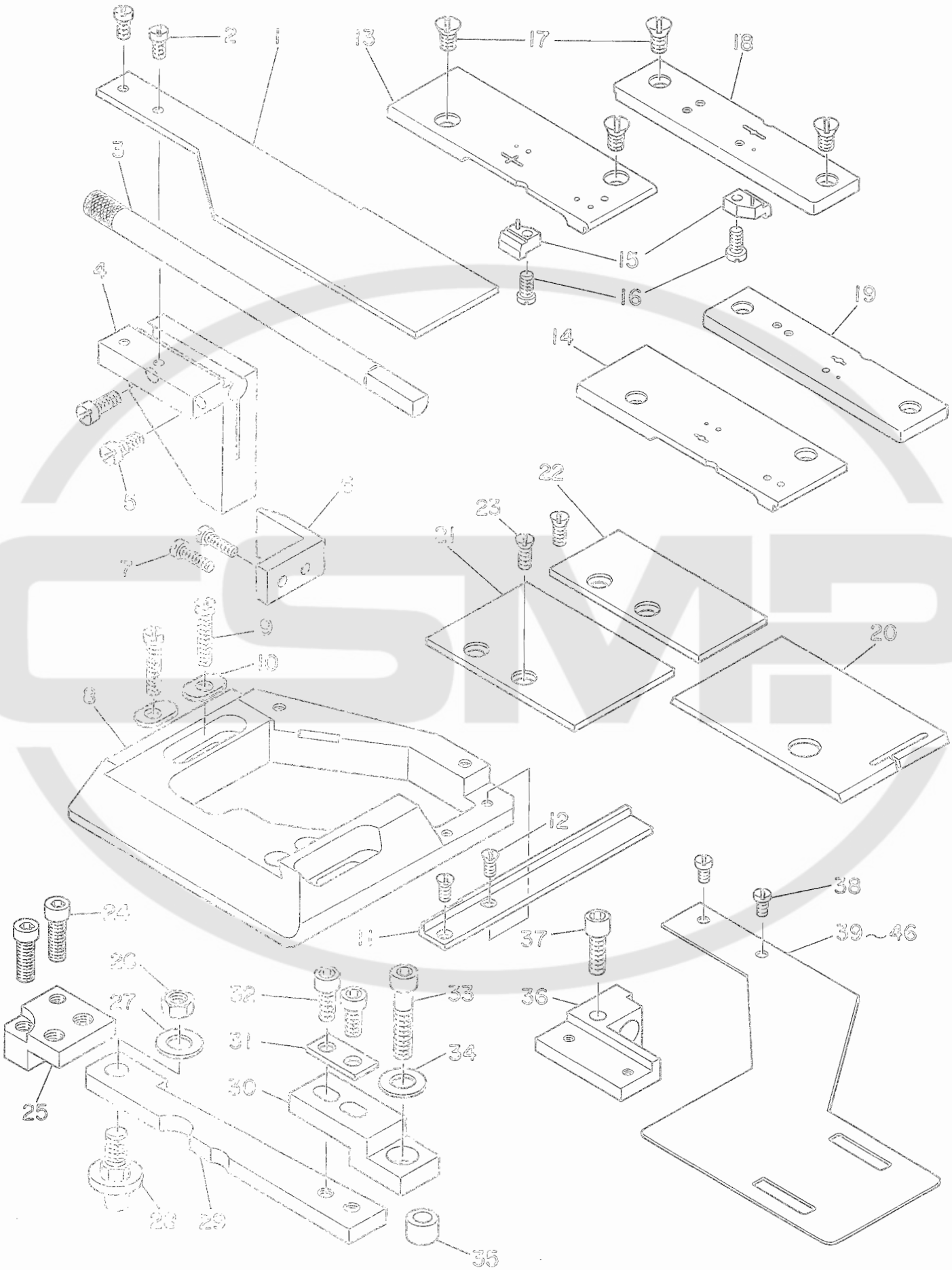

Ref. No.	Note 注記	Part No. 品番	Description	E. C. 変更年月	品名	Amt. Req. 数量
1		G1135-122-000	REAR SLIDE PLATE		ｳｼﾛｽﾍﾞﾘｲﾀ	1
2		SS-7090710-SL	SCREW 9/64-40 L=6.8		ﾏﾙﾋﾗﾈｼﾞ 9/64-40 L=6.8	2
3		G1136-122-000	SLIDE SHAFT		ｽﾗｲﾄﾞ ｼｬﾌﾄ	1
4		G1134-122-000	SLIDE PLATE BASE		ｳｼﾛｽﾍﾞﾘｲﾀ ﾄﾞﾀﾞｲ	1
5		SS-7111410-SP	SCREW 11/64-40 L=14		ﾏﾙﾋﾗﾈｼﾞ 11/64-40 L=14	2
6		G1137-122-000	SLIDE SHAFT BLOCK		ｽﾗｲﾄﾞｳｹ	1
7		SS-7090710-SL	SCREW 9/64-40 L=6.8		ﾏﾙﾋﾗﾈｼﾞ 9/64-40 L=6.8	2
8		G1130-122-000	THROAT PLATE BASE		ﾏｪﾊﾘｲﾀ ｲﾄﾞｳﾀﾞﾙ	1
9		SM-6051202-TP	SCREW M5X0.8 L=12		ﾛｯｶｸｱﾅﾎﾞﾙﾄ M5X0.8 L=12	2
10		G1139-122-000	WASHER		ｲﾄﾞｳﾀﾞﾙ ﾜｯｶﾞﾈ	2
11		G1138-122-000	HOOK BASE COVER PLATE		ﾏｪｶﾞﾏﾄﾞﾀﾞｲ ｶﾞｲﾀ	1
12		SS-1090750-SP	SCREW 9/64-40 L=7		ｼﾀﾒｽﾄﾘｯﾌｹﾈｼﾞ	2
13		G1131-122-000	FRONT THROAT PLATE		ﾏｪﾊﾘｲﾀ	1
14	#01	G1131-122-00A	FRONT THROAT PLATE		ﾏｪﾊﾘｲﾀ (ｳｽﾓﾉ)	1
15		G1145-122-000	THROAT PLATE NEEDLE GUARD		ﾊﾘｲﾀ ﾊﾘｶｹﾞ	2
16		SS-6080810-SP	SCREW 1/8-44 L= 8.0		ﾋﾗﾈｼﾞ 1/8-44 L=8	2
17		SS-1110840-SP	SCREW 11/64-40 L=8		ﾏﾙﾋﾗﾈｼﾞ 11/64-40 L=8	4
18		G1141-122-000	REAR THROAT PLATE		ｳｼﾛﾊﾘｲﾀ	1
19	#01	G1141-122-00A	REAR THROAT PLATE		ｳｼﾛﾊﾘｲﾀ (ｳｽﾓﾉ)	1
20		G1132-122-000	FRONT SLIDE PLATE		ﾏｪｽﾍﾞﾘｲﾀ	1
21	#02	G1133-122-00C	FRONT BED COVER		ﾍﾞｯﾄﾞﾏｪｶﾞﾀ	1
22	#03	G1133-122-00D	FRONT BED COVER		ﾍﾞｯﾄﾞﾏｪｶﾞﾀ	1
23		SS-1090750-SP	SCREW 9/64-40 L=7		ｼﾀﾒｽﾄﾘｯﾌｹﾈｼﾞ	4
24		SM-6051552-SP	SCREW M5 L=15		ﾛｯｶｸｱﾅﾎﾞﾙﾄ M5X0.8 L=15	2
25		G1140-122-000	HOOK BASE CONNECTING BLOCK		ｶﾏｼﾞｸﾀﾞｲ ﾚﾝｹﾂｶﾞﾈ	1
26		M4-6060001-SC	NUT M6		ﾛｯｶｸﾅｯﾄ M6 1SA	1
27		G2553-122-000	WASHER		ﾚﾝｹﾂﾛｯﾄﾞ ｶﾗｰ	1
28		G2557-122-000	HINGE SCREW		ｶﾑﾚﾊﾞｰ ﾂﾅｷﾋﾞﾗﾈｼﾞ	1
29		G2559-122-000	CONNECTING LEVER		ﾖｺｵｸﾘ ﾚﾝｹﾂﾛｯﾄﾞ	1
30		G2526-122-000	CONNECTING ROD		ﾚﾝｹﾂﾁｮｳｾｲ ﾛｯﾄﾞ	1
31		G2545-122-000	CONNECTING ROD WASHER		ﾚﾝｹﾂﾛｯﾄﾞ ﾜｯｶﾞﾈ	1
32		SM-6051202-SP	SCREW M5X0.8 L=12		ﾛｯｶｸｱﾅﾎﾞﾙﾄ M5X0.8 L=12	2
33		SM-6062502-SP	SCREW M6 L=25		ﾛｯｶｸｱﾅﾎﾞﾙﾄ M6 L=25	1
34		WP-0651001-SB	WASHER		ﾋﾗﾜｶﾞﾈ ｴｶﾞﾜﾏﾙ M6	1
35		G2540-122-000	COLLAR		ﾚﾝｹﾂﾛｯﾄﾞ ｼﾀﾝﾎﾞｽ	1
36		G2519-122-000	CLOTH LOWER PLATE BASE		ﾇﾉｵｻｴｼﾀｲﾀ ﾄﾞﾀﾞｲ	1
37		SM-6051552-TP	SCREW M5 L=15		ﾛｯｶｸｱﾅﾎﾞﾙﾄ	1
38		SS-7090510-SL	SCREW 9/64-40 L=4.6		ﾏﾙﾋﾗﾈｼﾞ 9/64-40 L=4.6	2
39	#04	G2516-122-00A	CLOTH LOWER PLATE 42MM		ﾇﾉｵｻｴｼﾀｲﾀ 42	1
40	#04	G2516-122-00B	CLOTH LOWER PLATE 45MM		ﾇﾉｵｻｴｼﾀｲﾀ 45	1
41	#04	G2516-122-00C	CLOTH LOWER PLATE 50MM		ﾇﾉｵｻｴｼﾀｲﾀ 50	1
42	#04	G2516-122-00D	CLOTH LOWER PLATE 55MM		ﾇﾉｵｻｴｼﾀｲﾀ 55	1
43	#04	G2516-122-00E	CLOTH LOWER PLATE 60MM		ﾇﾉｵｻｴｼﾀｲﾀ 60	1
44	#04	G2516-122-00F	CLOTH LOWER PLATE 65MM		ﾇﾉｵｻｴｼﾀｲﾀ 65	1
45	#04	G2516-122-00G	CLOTH LOWER PLATE 70MM		ﾇﾉｵｻｴｼﾀｲﾀ 70	1
46	#04	G2516-122-00H	CLOTH LOWER PLATE 75MM		ﾇﾉｵｻｴｼﾀｲﾀ 75	1

Note (注記) #01 ..... For light weight materials — うす物用
#02 ..... For 42 ~ 64 mm (1-21/32" ~ 2-17/32") — 42～64mm用
#03 ..... For 55 ~ 78 mm (2-11/64" ~ 3-5/64") — 55～78mm用
#04 ..... Selective part — 選択部品

3. MAIN SHAFT & NEEDLE BAR COMPONENTS
上軸、針棒関係

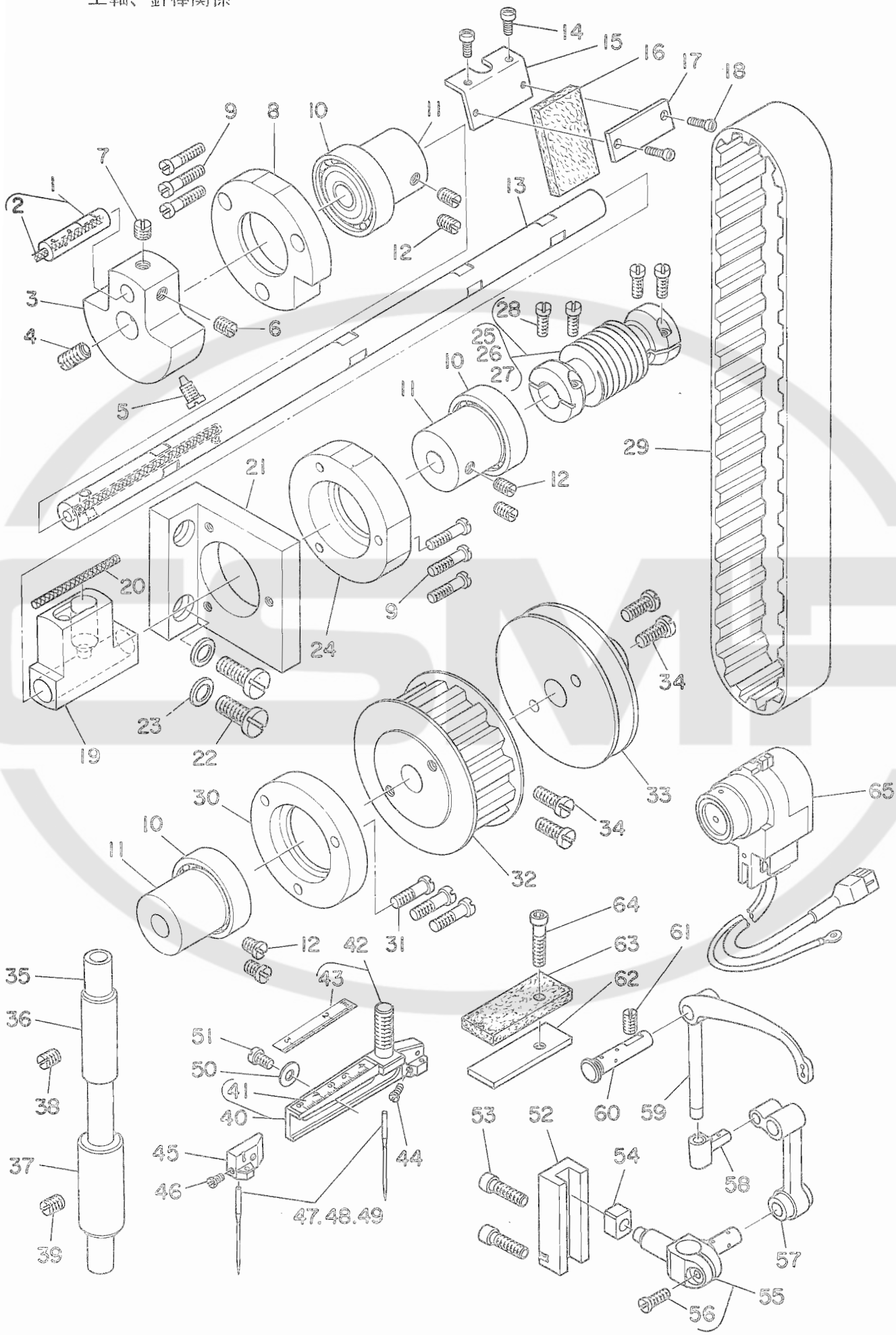

Ref. No.	Note 注記	Part No. 品番	Description	E. C. 変更年月	品名	Ant. Req. 数量
1		B1210-526-0A0	NEEDLE BAR CRANK PIN ASM.		ﾊﾘｵﾓﾃﾞﾗｸﾋﾟﾝ ｿｴ	1
2		C0-3050000-00	OIL WICK		ｺﾖｳ	(1)
3		G1201-122-000	COUNTERWEIGHT		ﾂｸﾘｵﾓﾘ	1
4		SS-5681650-TP	SCREW 9/32-28 L=16		ﾄﾒﾈｼﾞ 9/32-28 L=16	1
5		SS-7601750-TP	SCREW 9/32-28 L=16.5		ﾏﾙﾋﾗｶﾞﾀﾈｼﾞ 9/32-28 L=16.5	1
6		SS-8680540-SP	SCREW 9/32-28 L=4.5		ﾄﾒﾈｼﾞ 9/32-28 L=4.5	1
7		SS-8100730-SP	SCREW 9/32-28 L=7.		ﾄﾒﾈｼﾞ 9/32-28 L=7	1
8		G1207-122-000	FRONT HOUSING		ﾏｴｶﾞﾜﾊｳｼﾝｸﾞ	1
9		SM-6052002-TP	SCREW M5 L=20		ﾏﾙｶﾞﾀﾀﾋﾗﾅﾍﾞﾈｼﾞ M5X0.8 L=20	2
10		G1212-122-000	BEARING		ﾍﾞｱﾘﾝｸﾞ	6
11		G1207-122-000	BEARING BUSHING		ﾍﾞｱﾘﾝｸﾞﾌﾞｯｼｭ	2
12		SS-8150810-SP	SCREW 15/64-28 L=8		ﾄﾒﾈｼﾞ 15/64-28 L=7.5	6
13		G1202-122-000	MAIN SHAFT		ｼﾞｸｼﾞｸ	1
14		SS-6111010-SP	SCREW 11/64-40 L=9.5		ﾋﾗｶﾞﾀﾈｼﾞ 11/64-40 L=9.5	2
15		G2203-122-000	FELT INSTALLING PLATE		ﾌｪﾙﾄ ｼﾂﾁﾔｸﾊﾞﾝ	1
16		G2204-122-000	FELT		ｼﾂﾁｶﾞﾐﾌｪﾙﾄ	1
17		G2202-122-000	FELT WASHER PLATE		ﾌｪﾙﾄ ﾜｯｼｬﾌﾟﾚｰﾄ	1
18		S600-1100-000	SCREW		ﾄﾒﾈｼﾞ	1
19		G1210-122-000	LUBRICATION BLOCK		ｼﾂﾕｿｳﾌﾞﾛｯｸ	1
20		G1212-122-000	OIL WICK		ｼﾂﾕｺﾖｳ	1
21		G1205-122-000	INTERMEDIATE BUSHING BASE		ﾁｭｳｶﾝﾌﾞｯｼｭﾍﾞｰｽ	1
22		SM-6002-SM	SCREW M8 L=20.0		ﾏﾙｶﾞﾀﾀﾋﾗﾅﾍﾞﾈｼﾞ M8 L=20	2
23		WP-0601-SM	WASHER 6.4X17.4X1.6		ﾋﾗｳﾜﾜｯｼｬｰ M8	2
24		G1208-122-000	INTERMEDIATE HOUSING		ﾁｭｳｶﾝﾊｳｼﾝｸﾞ	1
25		[illegible]	WORM [illegible]		ｳｫｰﾑ ｿｴ	1
26	[illegible]	[illegible]	WORM [illegible]		ｳｫｰﾑ ｿｴ	1
27	[illegible]	[illegible]	WORM [illegible]		ｳｫｰﾑ ｿｴ	1
28		[illegible]	SCREW 11/64-40 L=14		ﾏﾙｶﾞﾀﾀﾋﾗﾅﾍﾞﾈｼﾞ 11/64-40 L=14	(1)
29		[illegible]	TIMING BELT		ﾀｲﾐﾝｸﾞﾍﾞﾙﾄ	1
30		[illegible]	NEEDLE BUSHING		ﾆｰﾄﾞﾙﾌﾞｯｼｭ	1
31		[illegible]	SCREW M5 L=20		ﾏﾙｶﾞﾀﾀﾋﾗﾅﾍﾞﾈｼﾞ M5X0.8 L=20	3
32		[illegible]	SPACER UNSEL		ｽﾍﾟｰｻｰ ｼﾀｶﾞﾐﾏｳﾝﾄ	1
33		[illegible]	PULLEY		ﾌﾟｰﾘｰ	1
34		[illegible]	SCREW M8 L=15		ﾏﾙｶﾞﾀﾀﾋﾗﾅﾍﾞﾈｼﾞ M8 L=15	1
35		G1401-122-000	NEEDLE BAR		ﾊﾘｵﾓﾃﾞ	1
36		G1402-122-000	NEEDLE BAR BUSHING, UPPER		ﾆｰﾄﾞﾙﾊﾞｰﾌﾞｯｼｭ ｱｯﾌﾟﾊﾟｰ	1
37		G1403-122-000	NEEDLE BAR BUSHING, LOWER		ﾆｰﾄﾞﾙﾊﾞｰﾌﾞｯｼｭ ﾛｰﾜｰ	1
38		SS-8150810-SP	SCREW 15/64-28 L=8		ﾄﾒﾈｼﾞ 15/64-28 L=7.5	1
39		SS-8150810-SP	SCREW 15/64-28 L=8		ﾄﾒﾈｼﾞ 15/64-28 L=7.5	1
40	#04	G1404-122-0A0	REAR NEEDLE CLAMP ASM.		ｳｼﾛﾊﾘｵﾓﾃﾞｸﾘﾝﾌﾟ ｿｴ	1
41	#05	G1404-122-000	SCALE		ﾊｸﾘﾝﾌﾟ ｽｹｰﾙ	(1)
42	#06	G1404-122-0A0	REAR NEEDLE CLAMP ASM.		ｳｼﾛﾊﾘｵﾓﾃﾞｸﾘﾝﾌﾟ ｿｴ	1
43	#06	G1402-122-000A	SCALE		ﾊｸﾘﾝﾌﾟ ｽｹｰﾙ	(1)
44		SS-6080610-SP	SCREW 1/8-44 L=6.4		ﾄﾒﾈｼﾞ 1/8-44 L=6.4	1
45		G1407-122-000	FRONT NEEDLE CLAMP		ﾏｴﾊﾘｵﾓﾃｸﾘﾝﾌﾟ	1
46		SS-6080610-SP	SCREW 1/8-44 L=6.4		ﾄﾒﾈｼﾞ 1/8-44 L=6.4	1
47		[illegible]	NEEDLE DPX17 #19		ﾊﾘ DPX17 #19-10	2
48		[illegible]	NEEDLE DPX17 #21		ﾊﾘ DPX17 #21-10	2
49	#06	[illegible]	NEEDLE 20.09 #120		ﾊﾘ 134 120-10	2
50		G.403-122-000	WASHER		ﾜｯｼｬｰ ﾌﾟﾗｽﾁｯｸ	1
51		SS-6111010-SP	SCREW 11/64-40 L=9.5		ﾏﾙｶﾞﾀﾀﾋﾗﾅﾍﾞﾈｼﾞ 11/64-40 L=9.5	1
52		G1404-122-000	SLIDE BLOCK GUIDE		ｽﾗｲﾄﾞﾌﾞﾛｯｸｶﾞｲﾄﾞ	1
53		SM-6052002-TP	SCREW M5 L=20		ﾏﾙｶﾞﾀﾀﾋﾗﾅﾍﾞﾈｼﾞ M5X0.8 L=20	2
54		G1414-252-000	CRANK SLIDE BLOCK		ｸﾗﾝｸﾌﾞﾛｯｸ	1
55		G1405-122-0A0	NEEDLE BAR CONNECTION ASM.		ﾊﾘｵﾓﾃﾞﾂﾅｷﾞ ｿｴ	1
56		SS-6111010-SP	SCREW 11/64-40 L=14		ﾏﾙｶﾞﾀﾀﾋﾗﾅﾍﾞﾈｼﾞ 11/64-40 L=14	(1)
57		G1409-122-000	NEEDLE BAR CRANK ROD		ﾊﾘｵﾓﾃﾞｸﾗﾝｸﾛｯﾄﾞ	1
58		B1907-526-0A0	TAKE-UP LEVER THRUST PIN ASM.		ﾃﾝｼﾞﾝﾚﾊﾞｰｽﾗｽﾄﾋﾟﾝ ｿｴ	1
59		G1901-122-000	THREAD TAKE-UP LEVER		ﾃﾝｼﾞﾝ	1
60		B1906-526-0A0	TAKE-UP LEVER PIN ASM.		ﾃﾝｼﾞﾝﾋﾟﾝｱｯﾌﾟ ｿｴ	1
61		SS-8151150-SP	SCREW 15/64-28 L=10.5		ﾄﾒﾈｼﾞ 15/64-28 L=10.5	1
62		G1903-122-000	OIL FELT INSTALLING PLATE		ｵｲﾙﾌｪﾙﾄﾊﾞﾝｼﾂﾁｲﾀ	1
63		G1902-122-000	OIL FELT		ｵｲﾙﾌｪﾙﾄ	1
64		SM-6052002-TP	SCREW M5 L=20		ﾏﾙｶﾞﾀﾀﾋﾗﾅﾍﾞﾈｼﾞ M5X0.8 L=20	1
65		[illegible]	SYNCHRONIZER ASM.		ｼﾝｸﾛﾅｲｻﾞｰ	1

Note (注記)

#01	For 28 stitches	28針用
#02	For 36 stitches	36針用
#03	For 42 stitches	42針用
#04	For indicated meter	メートル表示用
#05	For indicated inch	インチ表示用
#06	For Western Europe	西欧用

4. HOOK SHAFT & VERTICAL HOOK COMPONENTS
下軸、水平釜関係

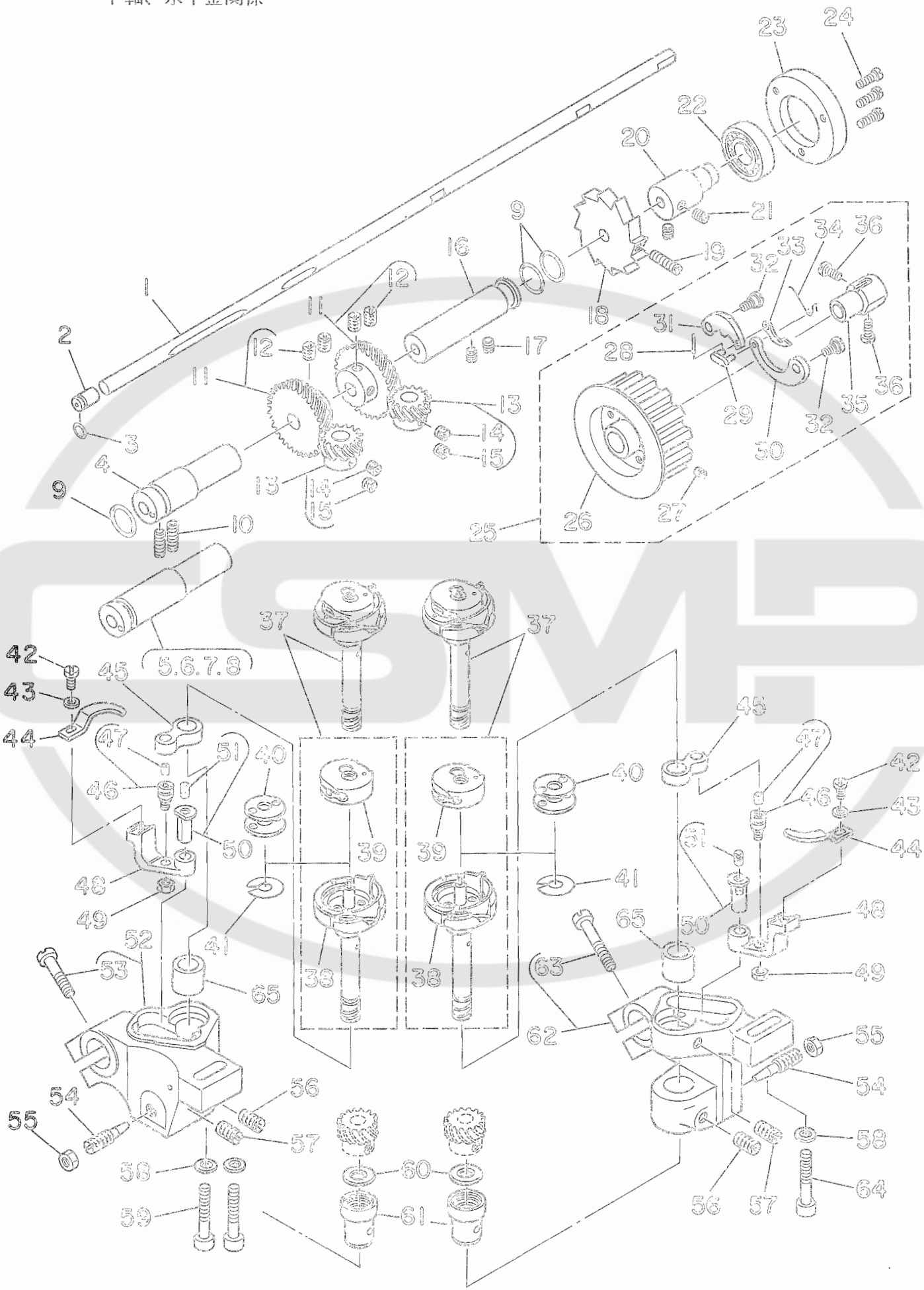

			名	Amt. Req. 数量
				1
				1
				1
				1
				1
				1
				1
				1
			L=13	2
				1
			-6.3	(4)
				2
				(2)
			L=6.3	(2)
				1
			L=7.2	2
				1
			L=7	2
				1
			L=7.5	2
				1
				1
				1
				(1)
			45.5	(1)
				(1)
				(1)
				(1)
				(1)
			L=8.2	(1)
				(1)
				(1)
				(1)
				(2)
				1
				(1)
				(2)
				2
				1
				1
				1
				1
				1
				1
				(0.3)
				1
				1
				2
				(0.2)
				1
			L=30	(1)
				2
				2
			L=10.5	2
			L=12	2
			56	3
			L=25	2
			8	2
				2
				1
			L=30	(1)
			L=30	1
				2

	42～68.5mmΦ
	48.1～78mmΦ
	42～60mmΦ
	50～7[illegible]mmΦ
	38～70mmΦ

5. FEED CAM COMPONENTS
布送りカム関係

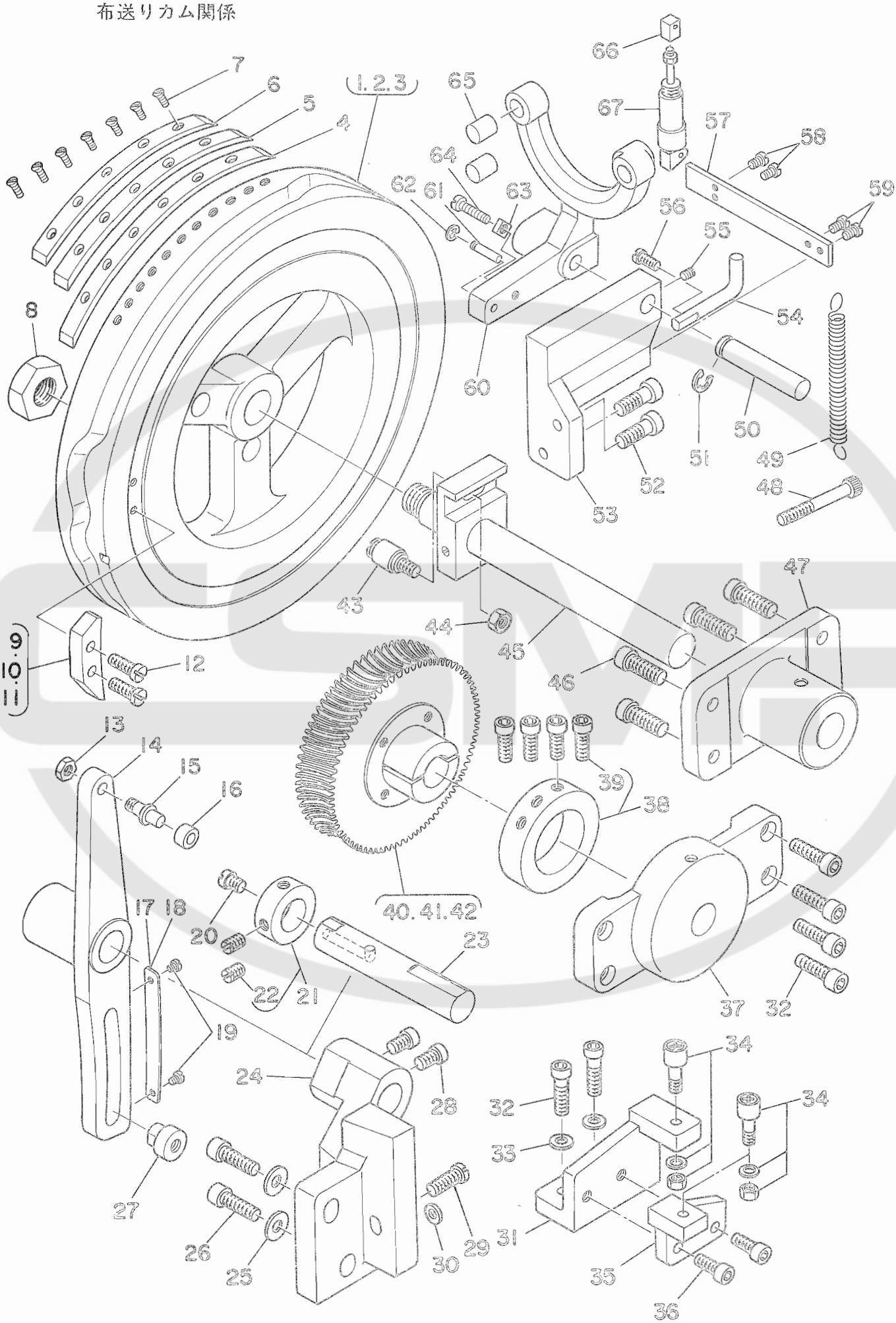

Ref. No.	Note 注記	Part No. 品番	Description	E. C. 変更年月	品名	Amt. Req. 数量
1	#01	62201-122-000	FEED CAM		ヌノオクリカム 28ヨン	1
2	#02	62201-122-00A	FEED CAM		ヌノオクリカム 36ヨン	1
3	#03	62201-122-009	FEED CAM		ヌノオクリカム 42ヨン	1
4	#01	62208-122-000	MICROSWITCH PLATE		テイシマイクロ スイッチイタ	1
5	#02	62208-122-00A	MICROSWITCH PLATE		テイシマイクロ スイッチイタ	1
6	#03	62208-122-009	MICROSWITCH PLATE		テイシマイクロ スイッチイタ	1
7		SS-000610-SP	SCREW 1/8-44 L=6.4		ナベネジ 1/8-44 L=6.4	6
8		NS-036160-SP	NUT 9/16-20		ロッカクナット 9/16-20	1
9	#01	63135-122-000	TRIPPING CAM		ハサイト オウェクカシカム 28	1
10	#02	63135-122-00A	TRIPPING CAM		ハサイト オウェクカシカム 42	1
11	#03	63135-122-009	TRIPPING CAM		ハサイト オウェクカシカム 36	1
12		SS-111610-SP	SCREW 11/64-40 L=14		マルヒラネジ 11/64-40 L=14	2
13		NS-060511-SP	NUT 1/4		ロッカクナット 1/4-40	1
14		62530-122-000	LENGTHWISE FEED CAM LEVER		タテオクリ カムレバー	1
15		62501-200-000	FEED CAM ROLLER SHAFT		タテオクリ カムコロシャフト	1
16		62502-280-009	FEED CAM ROLLER		ヌノオクリカム コロ (ブイ) 8	1
17	#04	62511-122-000	SCALE		タテオクリ メモリバン M	1
18	#05	62511-122-00A	SCALE		タテオクリ メモリバン インチ	1
19		SS-000510-SP	SCREW 3/32-56 L= 3.5		ヒラネジ 3/32-56 L=3.5	2
20		SS-130710-SP	SCREW 15/64-28 L=7		マルヒラネジ 15/64-28 L=7	2
21		62520-122-000	COLLAR ASM.		シテンカラー 25	1
22		SS-130810-SP	SCREW 15/64-28 L=8		トメネジ 15/64-28 L=7.5	(2)
23		62522-122-000	CAM LEVER SHAFT		タテオクリ シテンシャフト	1
24		62521-122-000	CAM LEVER BASE		カムレバー トダイ	1
25		[illegible]	WASHER 6.5X22.0X1.8		ヒラワッカ 6.5X22X1.8	2
26		[illegible]	SCREW M6 L=30		ロッカクアナボルト M6 L=30	2
27		[illegible]	LENGTHWISE FEED CAM LEVER NUT		カムレバー テンセイナット	2
28		[illegible]	SCREW M6 L=12		マエヌノオクリ トメネジ	2
29		[illegible]	SCREW M6 L=20		ロッカクアナボルト M6 L=20	1
30		[illegible]	WASHER		ヒラワッカ ミカキワク M6	1
31		[illegible]	GUIDE ROLLER BASE		ガイドローラ トダイ	1
32		[illegible]	SCREW M6 L=20		ロッカクアナボルト M6 L=20	6
33		[illegible]	WASHER		ヒラワッカ ミカキワク M6	2
34		[illegible]	CAM FOLLOWER ASM.		カム フオロア 25	2
35		[illegible]	GUIDE ROLLER PLATE		イトガローラ トダイ	1
36		[illegible]	SCREW M5 L=15		ロッカクアナボルト	2
37		[illegible]	BUSHING, RIGHT		ヨコシクエキ メタル	1
38		[illegible]	COLLAR ASM.		コテイカラー 25	1
39		[illegible]	SCREW M6 L=15		ロッカクアナボルト M6 L=15	(4)
40	#01	62205-122-000	WORM WHEEL ASM.		ウオームホイール 25	1
41	#02	[illegible]	WORM WHEEL ASM.		ウオームホイール 25	1
42	#03	62205-122-000	WORM WHEEL ASM.		ウオームホイール 25	1
43		62207-250-000	FEED CAM POSITION STUD		カム ガイドピン	1
44		NS-060511-SP	NUT 1/4		ロッカクナット 1/4-40	1
45		62201-280-000	WORM WHEEL SHAFT ASM.		カムシャフト (25)	1
46		SW-000204Z-TP	SCREW M6 L=20		ロッカクアナボルト M6 L=20	4
47		62207-122-000	BUSHING, LEFT		ヨコシクヒダリ メタル	1
48		SW-000512-TP	SCREW M5 L=40		ロッカクアナボルト M5X0.8 L=40	1
49		62603-122-000	BRAKE LEVER		ブレーキレバー ハネ	1
50		62603-122-000	BRAKE LEVER SHAFT		ブレーキレバー シテンシャフト	1
51		RE-000000-K0	SNAP RING 7		Eカタトメワ 7	1
52		SW-000204Z-TP	SCREW M6 L=20		ロッカクアナボルト M6 L=20	2
53		62602-122-000	BRAKE BASE		ブレーキ トダイ	1
54		62609-122-000	SYNCHRONIZER HOLDER STUD		ハサイテ タンシンクロホルダカネ	1
55		SS-130510-SP	SCREW 15/64-28 L=5		トメネジ	1
56		SS-111610-SP	SCREW 11/64-40 L= 9.5		ヒラネジ 11/64-40 L=9.5	1
57		62613-122-000	CORD HOLDER PLATE		テイシSW コードトメワ	1
58		SS-000610-SP	SCREW 1/8-44 L=6.4		ナベネジ 1/8-44 L=6.4	2
59		SS-000310-SP	SCREW 9/64-40 L=6.8		マルヒラネジ 9/64-40 L=6.8	2
60		62603-122-000	BRAKE LEVER		ブレーキレバー	1
61		62607-122-000	CYLINDER PIN		ブレーキシリンダ ピン	1
62		RE-000000-K0	SNAP RING 7		Eカタトメワ 7	1
63		65466-100-000	NUT		ナット	1
64		SS-111320-SP	SCREW 11/64-40 L=10.5		マルヒラネジ 11/64-40 L=10.5	1
65		62601-122-000	BRAKE PAD		ブレーキシュ	2
66		65116-100-000	CYLINDER BRACKET		シリンダー ウキカネ	1
67		65052-200-000-A	CYLINDER		シリンダー (タン 10X15)	1

Note (注記) #01 ..... For 28 stitches — 28針用
#02 ..... For 36 stitches — 36針用
#03 ..... For 42 stitches — 42針用
#04 ..... For indicated meter — メートル表示用
#05 ..... For indicated inch — インチ表示用

6. CLOTH FEED COMPONENTS
布送り関係

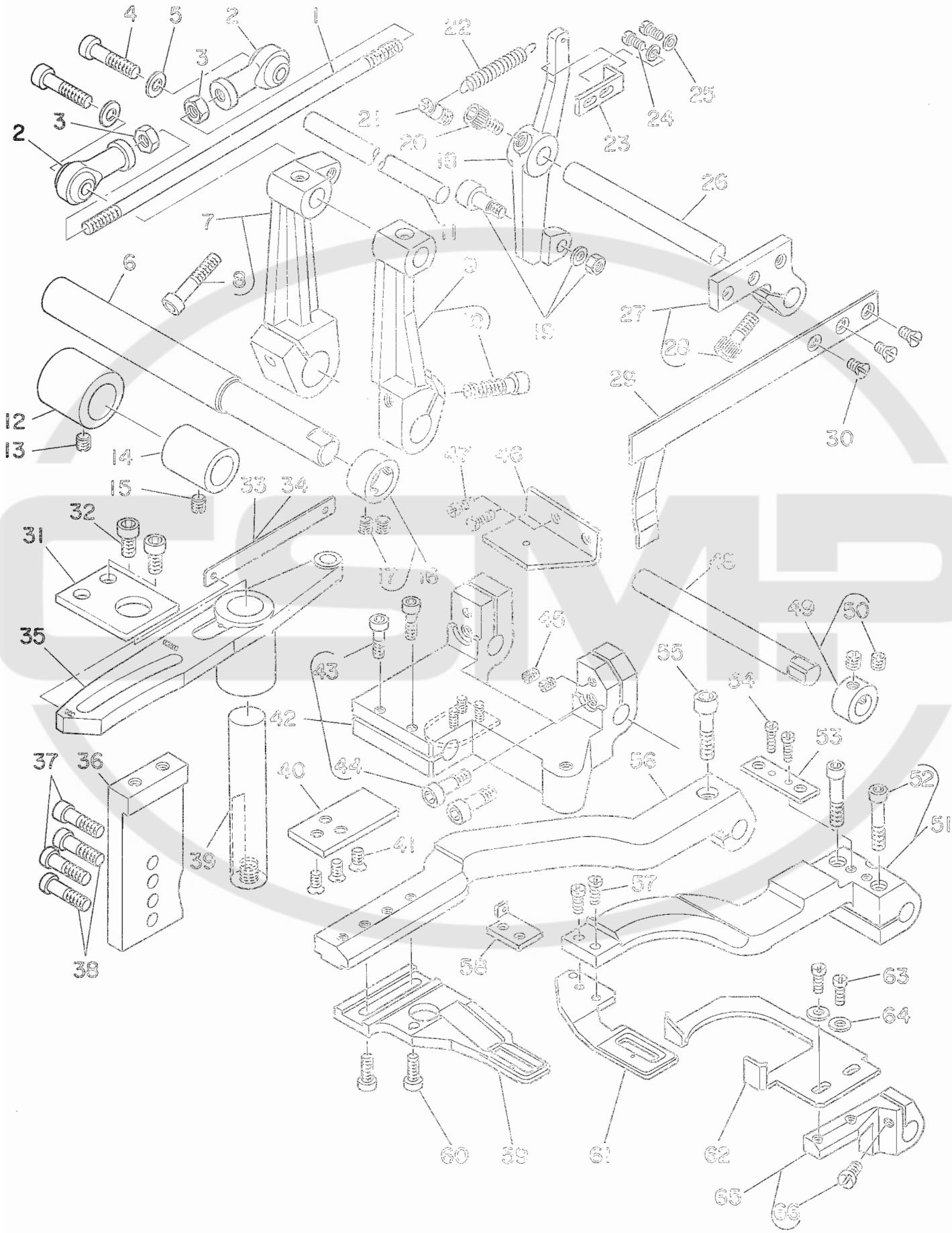

Ref. No.	Note 注記	Part No. 品番	Description	E. C. 変更年月	品名	Amt. Req. 数量
1		G2552-122-000	CONNECTING ROD		ﾀﾃｸｸﾘ ﾚﾝｹﾂﾛｯﾄ	1
2		G2551-122-000	JOINT ROD		ﾀﾃｸｸﾘ ﾚﾝｹﾂﾛｯﾄ゛	2
3		NM-6060001-SC	NUT M6		ﾛｯｶｸﾅｯﾄ M6 ﾚﾝｺﾞ	2
4		SM-6062502-SP	SCREW M6 L=25		ﾛｯｶｸｱﾅﾎﾞﾙﾄ M6 L=25	2
5		WP-0651001-SB	WASHER		ﾋﾗﾜｶﾞﾈ ﾐｶﾞﾈﾏﾙ M6	2
6		G2520-122-000	SHAFT		ﾀﾃｸｸﾘｼﾀﾃﾝ ｼｬﾌﾄ	1
7		G2526-122-CA0	CONNECTING LEVER ASM., LEFT		ﾋﾀﾞﾘ ﾚﾝｹﾂﾚﾊﾞｰ ｸﾐ	1
8		SM-6063012-SP	SCREW M6 L=30		ﾛｯｶｸｱﾅﾎﾞﾙﾄ M6 L=30	(1)
9		G2526-122-0A0	CONNECTING LEVER ASM., RIGHT		ﾐｷﾞ ﾚﾝｹﾂﾚﾊﾞｰ ｸﾐ	1
10		SM-6062502-SP	SCREW M6 L=25		ﾛｯｶｸｱﾅﾎﾞﾙﾄ M6 L=25	(1)
11		G2525-122-C00	CONNECTING LEVER SHAFT		ﾀﾃｸｸﾘ ﾚﾝｹﾂｼｬﾌﾄ	1
12		G2522-122-0.00	BUSHING, LEFT		ｼｬﾌﾄ ﾋﾀﾞﾘ ﾌﾞｯｼｭ	1
13		SS-3150510-SP	SCREW 15/64-28 L=5		ﾄﾒﾈｼﾞ	1
14		G2521-122-000	BUSHING, RIGHT		ｼｬﾌﾄ ﾐｷﾞﾌﾞｯｼｭ	1
15		SS-6150810-SP	SCREW 15/64-28 L=8		ﾄﾒﾈｼﾞ 15/64-28 L=7.5	1
16		G2523-122-CA0	COLLAR ASM.		ｼｬﾌﾄｶﾗｰ ｸﾐ	1
17		SS-3150810-SP	SCREW 15/64-28 L=8		ﾄﾒﾈｼﾞ 15/64-28 L=7.5	(2)
18		G3130-122-000	RELEASE LEVER SHAFT BASE		ｳｶｼﾏﾙﾀﾞﾏ ﾄﾒﾀﾞｲ	1
19		G3127-122-CA0	GUIDE ROLLER ASM.		ｲﾄｳｶｼ ｶﾞｲﾄﾞ ﾛｰﾗ	1
20		SM-6051202-TP	SCREW M5X0.3 L=12		ﾛｯｶｸｱﾅﾎﾞﾙﾄ M5X0.8 L=12	1
21		G3132-122-000	ANCHOR		ｳｶｼﾓﾄﾞｼ ﾊﾞﾈｶｷ	1
22		G3133-122-000	SPRING		ｳｶｼﾓﾄﾞｼ ﾊﾞﾈ	1
23		G3131-122-C00	PLATE		ﾊﾘｲﾄ ｳｶｼｼﾘｶﾞﾈ	1
24		SS-7090710-SL	SCREW 9/64-40 L=6.8		ﾏﾙﾋﾗﾈｼﾞ 9/64-40 L=6.8	2
25		WP-0450801-SD	WASHER 4.5X10.0X0.8		ﾋﾗﾜｶﾞﾈ 4.5X10X0.8	2
26		G3128-122-000	RELEASE LEVER SHAFT		ｳｶｼﾚﾊﾞｰ ｼｬﾌﾄ	1
27		G3129-122-CA0	RELEASE LEVER ASM.		ｳｶｼﾚﾊﾞｰ ｸﾐ	1
28		SM-6052002-TP	SCREW M5 L=20		ﾛｯｶｸｱﾅﾎﾞﾙﾄ M5X0.8 L=20	(1)
29		G3126-122-000	TENSION RELEASE PLATE		ﾊﾘｲﾄｵﾘｴ ｳｶｼｲﾀ	1
30		SS-7110840-SP	SCREW 11/64-40 L=8		ﾀﾗﾈｼﾞ 11/64-40 L=8	3
31		G3134-122-000	STOPPER PLATE		ｼﾃﾝｼﾞｸ ﾄﾒｲﾀ	1
32		G4126-100-000	SCREW M6 L=12		ﾏｴｽﾞﾉｵﾘｴ ﾄﾞﾀﾞｲﾈｼﾞ	2
33	#01	G2544-122-000	SCALE		ﾖｺｵｸﾘ ﾒﾓﾘｲﾀ M	1
34	#02	G2544-122-00A	SCALE		ﾖｺｵｸﾘ ﾒﾓﾘｲﾀ ｲﾝﾁ	1
35		G2534-122-000	FEED ACROSS CAM LEVER		ﾖｺｵｸﾘ ｶﾑﾚﾊﾞｰ	1
36		G2542-122-000	STOPPER PLATE BASE		ｼﾃﾝｼﾞｸ ﾄﾒｲﾀﾄﾞﾀﾞｲ	1
37		SM-6062002-TP	SCREW M6 L=20		ﾛｯｶｸｱﾅﾎﾞﾙﾄ M6 L=20	2
38		SM-6061552-SP	SCREW M6 L=15		ﾛｯｶｸｱﾅﾎﾞﾙﾄ M6 L=15	2
39		G2535-122-000	FEED ACROSS CAM LEVER STUD		ﾖｺｵｸﾘ ｼﾃﾝｼﾞｸ	1
40		G2547-122-000	FEED BRACKET SLIDE PLATE		ｵｸﾘﾒﾀﾙ ｽﾍﾞﾘｲﾀ	1
41		SS-7110840-SP	SCREW 11/64-40 L=8		ﾀﾗﾈｼﾞ 11/64-40 L=8	3
42		G2543-122-0A0	FEED BRACKET ASM.		ｵｸﾘﾒﾀﾙ ｸﾐ	1
43		G2554-122-000	SCREW M5 L=17.5		ｵｸﾘﾒﾀﾙ ﾈｼﾞ M5	(2)
44		G2555-122-000	SCREW M6 L=18.5		ｵｸﾘﾒﾀﾙ ﾈｼﾞ M6	(2)
45		SS-8150810-SP	SCREW 15/64-28 L=8		ﾄﾒﾈｼﾞ 15/64-28 L=7.5	2
46		G2550-122-000	VIBRATION STOPPER PLATE		ｵｸﾘ ﾌﾚﾄﾞﾒｲﾀ	1
47		SS-6110910-SP	SCREW 11/64-40 L= 9.5		ﾋﾗﾈｼﾞ 11/64-40 L=9.5	2
48		G2503-122-000	WORK CLAMP FOOT LEVER SHAFT		ｽﾉｵｴｳﾃﾞ ｼﾃﾝｼﾞｸ	1
49		G2553-122-0A0	COLLAR ASM.		ｼﾃﾝｼﾞｸ ｶﾗｰ ｸﾐ	1
50		SS-3150510-SP	SCREW 15/64-28 L=5		ﾄﾒﾈｼﾞ	(2)
51		G2511-122-0A0	REAR WORK CLAMP FOOT LEVER ASM		ｳｼﾛ ｽﾉｵｴｳﾃﾞ ｸﾐ	1
52		SM-6052502-SP	SCREW M5 L=25		ﾛｯｶｸｱﾅﾎﾞﾙﾄ M5X0.8 L=25	(2)
53		G2510-122-000	PLATE		ﾒﾀﾙ ﾁｮｳｾｲｲﾀ	1
54		G5009-100-000	SCREW		ﾄﾒﾈｼﾞ	2
55		SM-6062502-SP	SCREW M6 L=25		ﾛｯｶｸｱﾅﾎﾞﾙﾄ M6 L=25	1
56		G2509-122-000	FRONT WORK CLAMP FOOT LEVER		ﾏｴｽﾞﾉｵｴｳﾀﾞ	1
57		SM-6041012-TP	SCREW M4X0.7 L=10		ﾋﾗｺﾈｼﾞ M4X0.7 L=10	2
58		G2512-122-C00	WASHER PLATE		ｳｼﾛ ｵｴﾀﾞｲﾀ	1
59		G2507-122-000	FRONT WORK CLAMP FOOT		ﾏｴ ｵｴｶﾞﾈ	1
60		SM-6051202-SP	SCREW M5X0.3 L=12		ﾛｯｶｸｱﾅﾎﾞﾙﾄ M5X0.8 L=12	2
61		G2502-122-000	REAR WORK CLAMP FOOT		ｳｼﾛ ｵｴｶﾞﾈ	1
62		G2518-122-000	RULER		ｼﾞｮｳｷﾞ	1
63		SS-6111010-SP	SCREW 11/64-40 L= 9.5		ﾋﾗﾈｼﾞ 11/64-40 L=9.5	2
64		WP-0450801-SD	WASHER 4.5X10.0X0.8		ﾋﾗﾜｶﾞﾈ 4.5X10X0.8	2
65		G2517-122-CA0	RULER BASE ASM.		ｼﾞｮｳｷﾞﾄﾞﾀﾞｲ ｸﾐ	1
66		SS-7111410-SP	SCREW 11/64-40 L=14		ﾏﾙﾋﾗﾈｼﾞ 11/64-40 L=14	(1)

Note (注記) #01 ..... For indicated meter　　メートル表示用
#02 ..... For indicated inch　　インチ表示用

7. KNIFE & THREAD POSITIONER COMPONENTS (1)
メス、糸さばき関係(1)

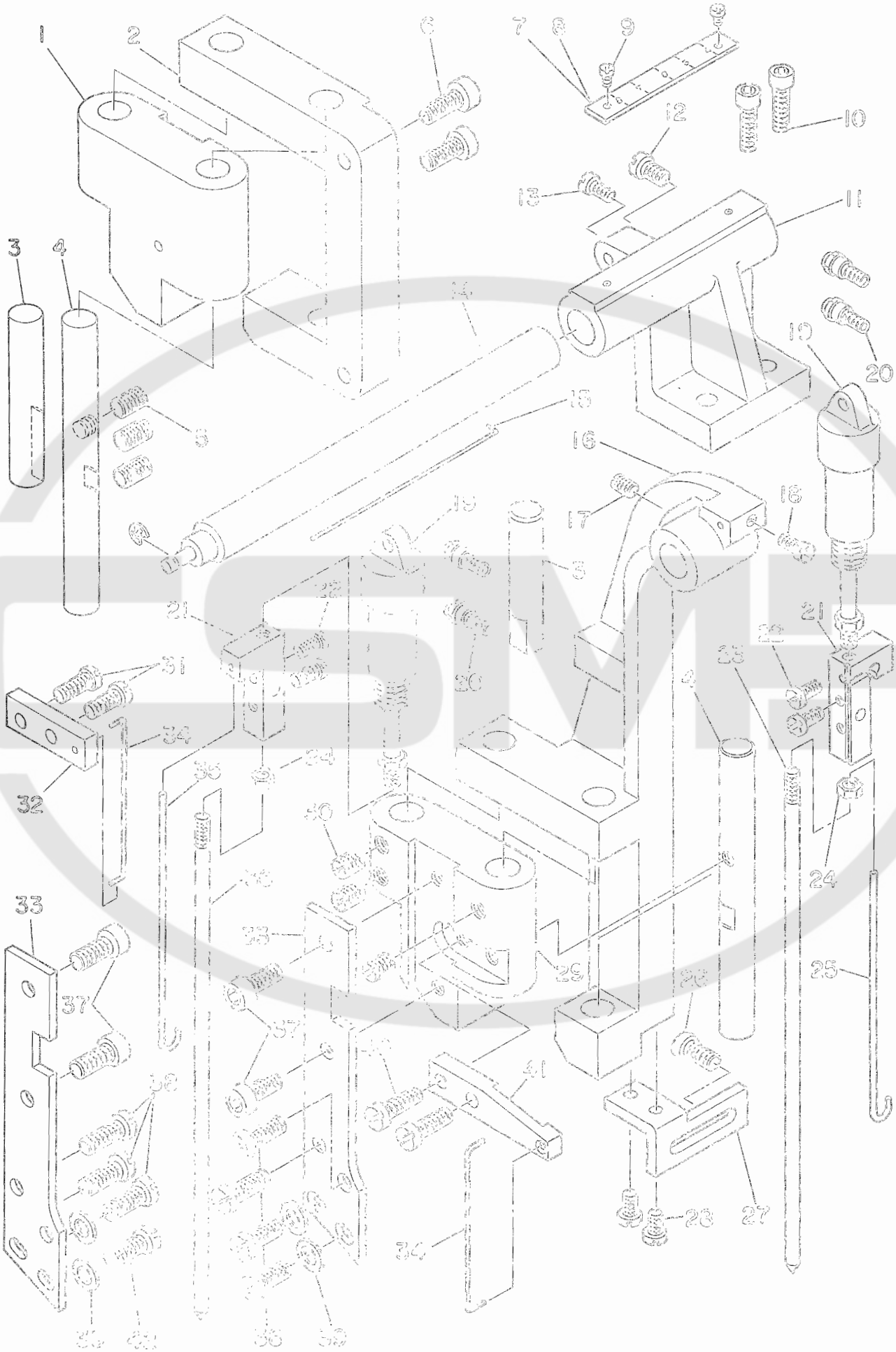

Ref. No.	Note 注記	Part No. 品番	Description	E. C. 変更年月	品名	Amt. Req. 数量
1		G2420-122-000	REAR KNIFE SLIDE BASE		ｽﾗｲﾄﾞﾄﾞﾀﾞｲ	1
2		G2419-122-000	REAR KNIFE BRACKET		ｳｼﾛﾒｽﾒﾀﾙ	1
3		G2406-122-000	SHAFT		ｽﾗｲﾄﾞ ﾌﾚﾄﾞﾒｼｬﾌﾄ	2
4		G2407-122-000	SLIDE SHAFT		ｽﾗｲﾄﾞ ｼｬﾌﾄ	2
5		SS-3150810-SP	SCREW 15/64-28 L=8		ﾄﾒﾈｼﾞ 15/64-28 L=7.5	3
6		SM-6052002-SP	SCREW M5X0.8 L=20		ﾛｯｶｸｱｳﾅﾎﾞﾙﾄ M5X0.8 L=20	2
7	#01	G5122-100-000	SCALE		ﾒﾓﾘｲﾀ (ﾐﾘ ﾋｮｰｼﾞ)	1
8	#02	G5122-100-00A	SCALE		ﾒﾓﾘｲﾀ (ｲﾝﾁﾋｮｰｼﾞ)	1
9		SS-6060810-TP	SCREW 3/32-56 L=4.5		ﾋﾗﾈｼﾞ 3/32-56 L=4.5	2
10		SM-6062002-TP	SCREW M6 L=20		ﾛｯｶｸｱｳﾅﾎﾞﾙﾄ M6 L=20	2
11		G2513-122-000	CYLINDER BASE		ｵｳｪｼﾘﾝﾀﾞｰ ﾄﾞﾀﾞｲ	1
12		SM-6054002-SP	SCREW M5 L=10		ﾛｯｶｸｱｳﾅﾎﾞﾙﾄ M5X0.8 L=10	1
13		SS-7000710-SL	SCREW 9/64-40 L=6.8		ﾏﾙﾋﾗﾈｼﾞ 9/64-40 L=6.8	1
14		G2514-122-000	CYLINDER ADJUSTING SHAFT		ｼﾘﾝﾀﾞｰ ｱｼﾞｬｽﾄﾋﾟﾝ	1
15		G2515-122-000	POINTER		ｵｳｪｼﾘﾝﾀﾞｰ ｼｼﾞﾎﾟｳ	1
16		G2403-122-000	FRONT KNIFE BRACKET		ﾏｴﾒｽﾒﾀﾙ	1
17		SS-3150810-SP	SCREW 15/64-28 L=8		ﾄﾒﾈｼﾞ 15/64-28 L=7.5	1
18		SS-7000710-SL	SCREW 9/64-40 L=6.8		ﾏﾙﾋﾗﾈｼﾞ 9/64-40 L=6.8	1
19		G6256-100-000-A	CYLINDER		ｼﾘﾝﾀﾞｰ (ﾌｸ 10X25)	2
20		G5009-100-000	BARBED FITTING JOINT		ﾊﾞｰﾌﾞ ﾂｷﾞﾃ	4
21		G2506-122-000	CONNECTING BLOCK		ｽﾉｵｳｪｼﾘﾝﾀﾞｰﾚﾝｹﾂｶﾈ	2
22		SS-7000710-SL	SCREW 9/64-40 L=6.8		ﾏﾙﾋﾗﾈｼﾞ 9/64-40 L=6.8	4
23		G2504-122-000	FRONT BAR		ｽﾉｵｳｪ ﾏｴ ｼｬﾌﾄ	1
24		NM-6040001-SC	NUT M4		ﾛｯｶｸﾅｯﾄ M4X0.7 1ｽﾘ	2
25		G2507-122-000	CONNECTING ROD, FRONT		ﾏｴｽﾉｵｳｪ ﾚﾝｹﾂﾎﾞｳ	1
26		SM-6054002-SP	SCREW M5 L=10		ﾛｯｶｸｱｳﾅﾎﾞﾙﾄ M5X0.8 L=10	1
27		G2404-122-000	FRONT KNIFE BRACKET PLATE		ﾏｴﾒｽﾒﾀﾙ ｺﾃｲｲﾀ	1
28		SS-7000710-SL	SCREW 9/64-40 L=6.8		ﾏﾙﾋﾗﾈｼﾞ 9/64-40 L=6.8	2
29		G2401-122-000	FRONT KNIFE SLIDE BASE		ﾏｴﾒｽｽﾗｲﾄﾞ ﾄﾞﾀﾞｲ	1
30		SS-3150810-SP	SCREW 15/64-28 L=8		ﾄﾒﾈｼﾞ 15/64-28 L=7.5	3
31		SS-7111410-SP	SCREW 11/64-40 L=14		ﾏﾙﾋﾗﾈｼﾞ 11/64-40 L=14	2
32		G2521-122-000	CONNECTING ROD PLATE		ｵｳｪﾎﾞｳ ﾂｷﾞｲﾀ	1
33		G2405-122-000	STOPPER PLATE		ﾒｽｲﾄﾂﾊﾞﾒ ﾄﾒｲﾀ	2
34		G2405-122-000	CONNECTING ROD		ﾒｽｿｰﾁ ﾚﾝｹﾂﾛｯﾄﾞ	2
35		G2508-122-000	CONNECTING ROD, REAR		ｳｼﾛｽﾉｵｳｪ ﾚﾝｹﾂﾎﾞｳ	1
36		G2505-122-000	REAR BAR		ｽﾉｵｳｪ ｳｼﾛ ｼｬﾌﾄ	1
37		SM-6051202-TP	SCREW M5X0.8 L=12		ﾛｯｶｸｱｳﾅﾎﾞﾙﾄ M5X0.8 L=12	4
38		SS-3111010-SP	SCREW 11/64-40 L= 9.5		ﾋﾗﾈｼﾞ 11/64-40 L=9.5	7
39		WP-0430801-SB	WASHER 4.5X10.0X0.8		ﾋﾗﾜｶﾞﾈ 4.5X10X0.8	4
40		SS-7111410-SP	SCREW 11/64-40 L=14		ﾏﾙﾋﾗﾈｼﾞ 11/64-40 L=14	2
41		G2402-122-000	CONNECTING ROD PLATE		ﾏｴﾒｽｵｳｪﾎﾞｳ ﾂｷﾞｲﾀ	1
42		SS-7111410-SP	SCREW 11/64-40 L=14		ﾏﾙﾋﾗﾈｼﾞ 11/64-40 L=14	1

Note (注記) #01 ..... For indicated meter　　メートル表示用
#02 ..... For indicated inch　　インチ表示用

8. KNIFE & THREAD POSITIONER COMPONENTS (2)
メス、糸さばき関係(2)

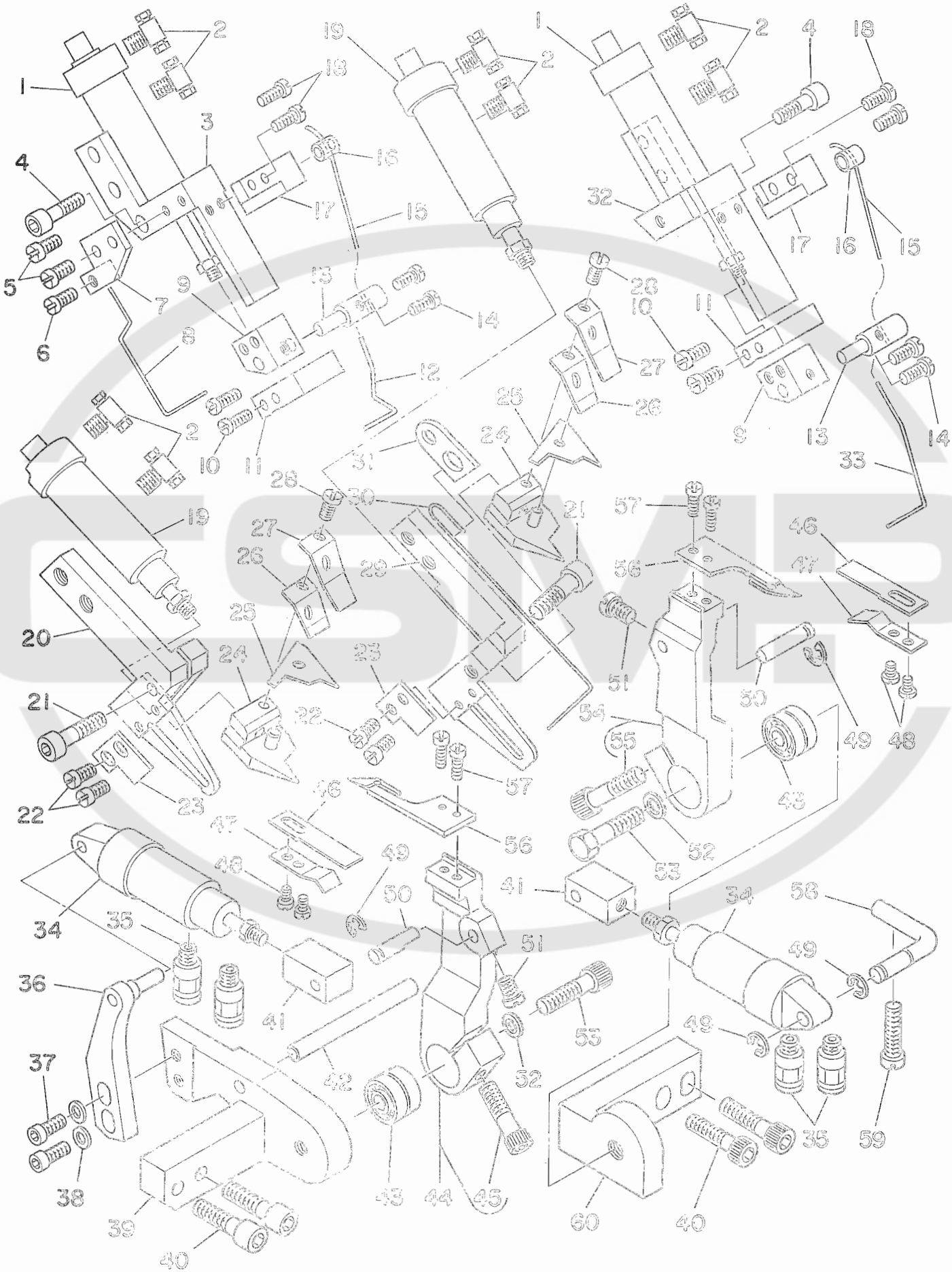

Ref. No.	Note 注記	Part No. 品番	Description	E. C. 変更年月	品名	Amt. Req. 数量
1		62101-122-000	THREAD POSITIONER CYLINDER		イトタハ゜ネ シリンタ゜	2
2		PA-X080400-01	QUICK COUPLING		ワンタッチツキテ゜	8
3		62102-122-000	CYLINDER BASE		イトタハ゜ネ トタ゛イ	1
4		SM-6041402-TN	SCREW M4X0.7 L=14		ロッカクアナホ゜ルト M4X0.7 L=14	2
5		SS-6080610-SP	SCREW 1/8-44 L=6.4		ナヘ゜ネシ゜ 1/8-44 L=6.4	2
6		SS-6080810-SP	SCREW 1/8-44 L= 8.0		ヒラネシ゜ 1/8-44 L=8	2
7		62410-122-000	THREAD STOPPER SPRING BRACKET		マエイトトメハ゜ネ トタ゛イ	1
8		62409-122-000	THREAD STOPPER SPRING		マエイトトメハ゜ネ	1
9		62106-122-000	BLOCK		イトタハ゜ネ メタル	2
10		SS-6080610-SP	SCREW 1/8-44 L=6.4		ナヘ゜ネシ゜ 1/8-44 L=6.4	4
11		62105-122-000	VIBRATION STOPPER PLATE		イトタハ゜ネ フレトメイタ	2
12		62110-122-000	FRONT WIPER		マエワイハ゜	1
13		62104-122-000	PIVOT PIN		イトタハ゜ネ シテンシタ゛	2
14		SS-6080410-SP	SCREW 1/8-44 L=4		ヒラネシ゜ 1/8-44 L=4	4
15		62109-122-000	WIPER GUIDE LEVER		ワイハ゜ アンナイカ゜ネレハ゜ー	2
16		62107-122-000	LEVER RESERVER		アンナイカ゜ネウケ マルタマ	2
17		62108-122-000	THREAD POSITIONER GUIDE		イトタハ゜ネ アンナイ	2
18		SS-6080610-SP	SCREW 1/8-44 L=6.4		ナヘ゜ネシ゜ 1/8-44 L=6.4	4
19		62[illegible]-122-000	UPPER KNIFE CYLINDER		ウワメスシリンタ゜	2
20		62[illegible]-122-000	UPPER KNIFE BASE, FRONT		ウワメストタ゛イ	1
21		SM-[illegible]-TN	SCREW M4X0.7 L=14		ロッカクアナホ゜ルト M4X0.7 L=14	2
22		SS-[illegible]-SP	SCREW 1/8-44 L=6.4		ナヘ゜ネシ゜ 1/8-44 L=6.4	4
23		62[illegible]-000	THREAD OPENING PLATE		メスヒラキイタ	2
24		62[illegible]-000	UPPER FIXED KNIFE		ウワコテイメス	2
25		62[illegible]-122-000	UPPER MOVING KNIFE		ウワトハ゜ウメス	2
26		[illegible]-122-000	PRESSER SPRING, LOWER		ウワメス オサエタハ゜ネ	2
27		[illegible]-122-000	PRESSER SPRING, UPPER		ウワメス オサエウハ゜ネ	2
28		SS-6080810-SP	SCREW 1/8-44 L= 8.0		ヒラネシ゜ 1/8-44 L=8	2
29		62[illegible]-122-000	UPPER KNIFE BASE, REAR		ウワメストタ゛イ	1
30		[illegible]-000	THREAD STOPPER SPRING		ウシロトメハ゜ネ	1
31		62[illegible]-000	THREAD STOPPER SPRING PLATE		ウシロトメハ゜ネ トメイタ	1
32		62[illegible]-000	CYLINDER BASE		ウシロイトタハ゜ネ トタ゛イ	1
33		62[illegible]-01	REAR WIPER		ウシロワイハ゜	1
34		62[illegible]-000	CYLINDER		シリンタ゜	2
35		[illegible]-01	QUICK COUPLING		ワンタッチツキテ゜	4
36		62[illegible]-000	CYLINDER BASE		シタマエメス トタ゛イ	1
37		SM-[illegible]-TN	SCREW M4 L=10		ロッカクアナホ゜ルト M4X0.7 L=10	2
38		[illegible]-0450801-SS	WASHER M4		ヒラケ゛カ゜ネ エカ゜ネマル M4	2
39		62[illegible]-122-000	LOWER KNIFE LEVER BASE, FRONT		シタマエメス レハ゜ートタ゛イ	1
40		SM-6052002-TP	SCREW M5 L=20		ロッカクアナホ゜ルト M5X0.8 L=20	4
41		62[illegible]-000	CYLINDER BRACKET		シリンタ゜ー ウケカ゜ネ	2
42		62[illegible]-000	HOOK POSITIONING BAR		カマイチタ゛シ アタリホ゜ウ	1
43		62[illegible]-122-000	BEARING		シタメスシ゛ク ハ゜アリンタ゛	4
44		62427-122-000	LOWER KNIFE LEVER ASM., FRONT		マエ シタメスレハ゜ー クミ	1
45		SM-6052002-TP	SCREW M5 L=20		ロッカクアナホ゜ルト M5X0.8 L=20	(1)
46		62429-122-000	LOWER FIXED KNIFE		シタコテイメス	2
47		62430-122-000	FIXED KNIFE AUXILIARY PLATE		コテイメス ホシ゛ヨイタ	2
48		SS-6080320-SP	SCREW 1/8-44 L= 2.5		ヒラネシ゜ 1/8-44 L=2.5	4
49		RE-0300000-KO	SNAP RING 3		エカ゜タトメワ 3	4
50		62434-122-000	CYLINDER PIN		シリンタ゜ ウケカ゜ネヒ゜ン	2
51		SS-7090710-SL	SCREW 9/64-40 L=6.8		マルヒラネシ゜ 9/64-40 L=6.8	2
52		82307-816-000	WASHER		ロウト゜ ケ゜カネ	2
53		SM-6052002-TP	SCREW M5 L=20		ロッカクアナホ゜ルト M5X0.8 L=20	2
54		62433-122-000	LOWER KNIFE LEVER ASM., REAR		ウシロ シタメスレハ゜ー クミ	1
55		SM-6052002-TP	SCREW M5 L=20		ロッカクアナホ゜ルト M5X0.8 L=20	(1)
56		62428-122-000	LOWER MOVING KNIFE		シタイトハ゜ウメス	2
57		SS-6080810-SP	SCREW 1/8-44 L= 8.0		ヒラネシ゜ 1/8-44 L=8	4
58		62435-122-000	CYLINDER PIVOT PIN		シリンタ゜トメヒ゜ン	1
59		SS-7090[illegible]10-SP	SCREW 9/64-40 L=17.5		マルヒラネシ゜ 9/64-40 L=17.5	1
60		62432-122-000	LOWER KNIFE LEVER BASE, REAR		シタウシロメスレハ゜ートタ゛イ	1

9. THREAD TENSION COMPONENTS
糸調子関係

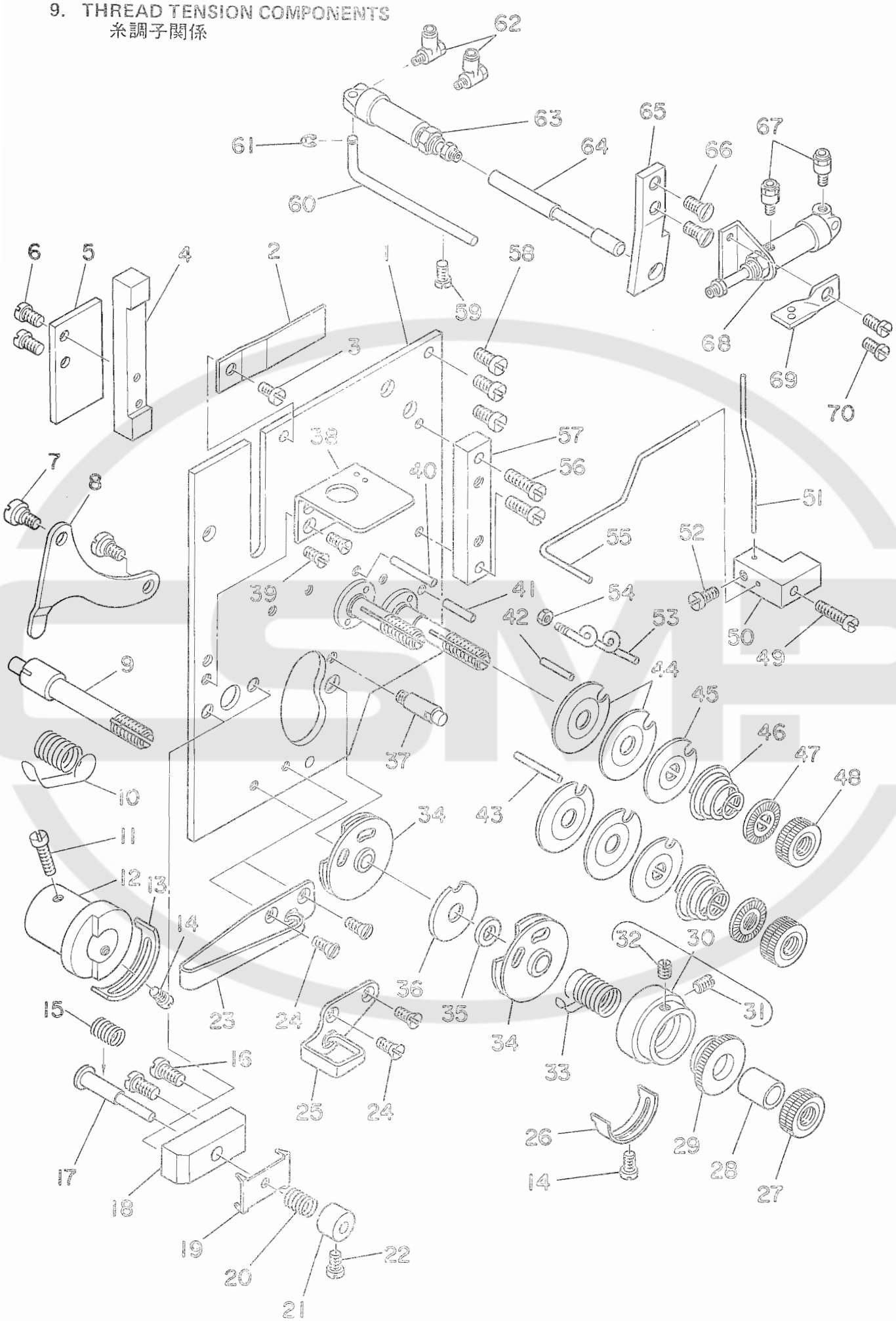

Ref. No.	Note 注記	Part No. 品番	Description	E. C. 変更年月	品名	Amt. Req. 数量
1		G3101-122-040	TENSION BASE PLATE ASM.		ｲﾄﾁｮｰｼ ﾄﾘﾂｹｲﾀ ｸﾐ	1
2		G3129-122-000	PRESSER PLATE		ｳｲﾊﾟﾌﾚﾄﾞﾒｲﾀ	1
3		SS-7090710-SL	SCREW 9/64-40 L=6.8		ﾏﾙﾋﾗﾈｼﾞ 9/64-40 L=6.8	1
4		G3127-122-000	RELEASE PLATE GUIDE		ｳｶｼｲﾀ ｶﾞｲﾄﾞ	1
5		G3124-122-000	PRESSER PLATE		ﾊｻｲﾄ ｵｻｴｲﾀ ｵｻｴ	1
6		SS-6080610-SP	SCREW 1/8-44 L=6.4		ﾅﾍﾞﾈｼﾞ 1/8-44 L=6.4	2
7		SP-0470281-SP	HINGE SCREW D=4.7 H=2.8		ﾀﾞﾝｾﾝﾈｼﾞ D=4.7 H=2.8	2
8		G3138-122-000	TENSION RELEASE LEVER		ｲﾄﾁｮｳﾒｳｹｲﾀ	1
9		B3123-527-000	THREAD TAKE-UP SPRING STUD		ｲﾄﾄﾘﾊﾞﾈ ｼﾞｸ	1
10		B3128-051-000	THREAD TAKEUP SPRING		ｲﾄﾄﾘﾊﾞﾈ	1
11		SS-6091020-TP	SCREW 9/64-40 L=10		ﾅﾍﾞﾈｼﾞ 9/64-40 L=10	1
12		G3106-122-000	THREAD TENSION POST		ｲﾄﾁｮｳｼ ﾄﾞﾀﾞｲ	1
13		B3138-051-000	TAKE-UP SPRING ADJUSTING PLATE		ｲﾄﾄﾘﾊﾞﾈ ﾁｮｰｾｲｲﾀ	1
14		SS-7090520-SP	SCREW 9/64-40 L= 4.5		ﾏﾙﾋﾗﾈｼﾞ 9/64-40 L=4.5	2
15		G3124-122-000	NEEDLE THREAD GUIDE SPRING		ｵｻｴﾎﾞｳ ﾓﾄﾞｼﾊﾞﾈ	1
16		SS-6110710-TP	SCREW 11/64-40 L= 6.5		ﾋﾗﾈｼﾞ 11/64-40 L=6.5	2
17		G3122-122-000	NEEDLE THREAD GUIDE STUD		ﾊｻｲﾄｵｻｴﾎﾞｳ	1
18		G3125-122-000	NEEDLE THREAD GUIDE BASE		ﾊｻｲﾄｵｻｴ ﾄﾞﾀﾞｲ	1
19		G3121-122-000	NEEDLE THREAD GUIDE		ﾊｻｲﾄｵｻｴ	1
20		G3113-500-000	TENSION SPRING		ｲﾄﾁｮｰｼﾊﾞﾈ	1
21		G3123-122-000	NEEDLE THREAD GUIDE COLLAR		ﾊｻｲﾄｵｻｴﾎﾞｳ ｶﾗｰ	1
22		SS-6080610-SP	SCREW 1/8-44 L=6.4		ﾅﾍﾞﾈｼﾞ 1/8-44 L=6.4	1
23		G3107-122-000	THREAD GUIDE, LOWER		ｲﾄﾁｮｳｼ ｲﾄｱﾝﾅｲ ｼﾀ	1
24		SS-7090750-SP	SCREW 9/64-40 L=7		ｼﾀﾒｽﾄﾘﾂｹﾈｼﾞ	4
25		B3129-527-000	THREAD GUIDE, UPPER		ｲﾄｱﾝﾅｲ (ｳｴ)	1
26		B3138-527-000	TAKE-UP SPRING ADJUSTING PLATE B		ｲﾄﾄﾘﾊﾞﾈ ﾁｮｰｾｲｲﾀ B	1
27		B3106-012-000	THREAD TENSION STUD NUT		ｲﾄﾁｮｰｼ ﾅﾂﾄ	1
28		B3143-527-000	PRESSER COLLAR		ｲﾄﾄﾘﾊﾞﾈ ｱﾝﾅｲｵｻｴ	1
29		B3135-527-000	TAKE-UP SPRING GUIDE		ｲﾄﾄﾘ ﾊﾞﾈｶｲﾄﾞ	1
30		B3140-527-040	THREAD TENSION POSY ASM.		ｲﾄﾄﾘﾊﾞﾈｶｲﾄﾞ ﾄﾞﾀﾞｲ ｸﾐ	1
31		SS-6080610-SP	SCREW 1/8-44 L=5.5		ﾄﾒﾈｼﾞ 1/8-44 L=5.5	(1)
32		SS-6080610-SP	SCREW 1/8-44 L= 3.5		ﾄﾒﾈｼﾞ 1/8-44 L=3.5	(1)
33		B3128-527-000	THREAD TAKE-UP SPRING B		ｲﾄﾄﾘﾊﾞﾈ B	1
34		B3137-527-040	THREAD TAKE-UP SPRING GUIDE ASM.		ｲﾄﾄﾘﾊﾞﾈ ｱﾝﾅｲ ｸﾐ	2
35		B3139-527-000	COLLAR		ｲﾄﾄﾘﾊﾞﾈ ｼﾞﾀｶﾗｰ	1
36		B3140-527-000	TAKE-UP SPRING GUIDE PLATE		ｲﾄﾄﾘﾊﾞﾈ ｱﾝﾅｲｲﾀ	1
37		B3143-527-000	TAKE-UP SPRING GUIDE STUD		ｲﾄﾄﾘﾊﾞﾈ ｶｹﾄﾞﾀﾞｲｼﾞｸ	1
38		G3108-122-000	THREAD GUIDE, UPPER		ｲﾄﾁｮｳｼ ｲﾄｱﾝﾅｲ ｳｴ	1
39		SS-7090750-SP	SCREW 9/64-40 L=7		ｼﾀﾒｽﾄﾘﾂｹﾈｼﾞ	2
40		G3104-122-000	PIN, LARGE		ｲﾄﾁｮｳｼｹﾀﾗﾌﾚﾄﾒ ﾀﾞｲ	1
41		G3103-122-000	PIN, SMALL		ｲﾄﾁｮｳｼｹﾀﾗﾌﾚﾄﾒ ｼｮｳ	1
42		G3112-122-000	PIN, SHORT		ｶｲﾍｲﾎﾞｳ ﾀﾝ	1
43		G3113-122-000	PIN, LONG		ｶｲﾍｲﾎﾞｳ ﾁｮｳ	1
44		B3126-051-000	TENSION DISC		ｲﾄﾁｮｰｼ ｻﾗ	4
45		B3132-051-000	TENSION DISC HOLDER		ｲﾄﾁｮｰｼｻﾗ ｵｻｴ	2
46		B3129-526-000	TENSION SPRING (1.2)		ｲﾄﾁｮｰｼ ﾊﾞﾈ (1.2)	2
47		B3120-125-000	TENSION DISC STOPPER		ｲﾄﾁｮｰｼｻﾗ ｶｲﾃﾝﾄﾞﾒ	2
48		B3116-512-000	TENSION NUT 9		ｲﾄﾁｮｰｼ ﾅﾂﾄ B	2
49		G5009-100-000	SCREW		ﾄﾒﾈｼﾞ	1
50		G3117-122-000	CYLINDER BLOCK		ｼﾘﾝﾀﾞｰ ｻｷｶﾈ	1
51		G3118-122-000	BAR		ﾎｼﾞﾖｳｲﾊﾟ ﾌﾚﾄﾞﾒ	1
52		SS-7090710-SL	SCREW 9/64-40 L=6.8		ﾏﾙﾋﾗﾈｼﾞ 9/64-40 L=6.8	1
53		G3114-122-000	THREAD GUIDE		ｲﾄﾁｮｳｼｼﾞｻﾗ ｲﾄｱﾝﾅｲ	1
54		NS-6060350-SP	NUT 3/32-56		ﾛｯｶｸﾅｯﾄ 3/32-56	1
55		G3116-122-000	AUXILIARY WIPER		ﾎｼﾞﾖｳｲﾊﾟ	1
56		G5009-100-000	SCREW		ﾄﾒﾈｼﾞ	2
57		G3120-122-000	CYLINDER INSTALLING PLATE		ｼﾘﾝﾀﾞｰ ﾄﾘﾂｹｻﾞｲﾀ	1
58		SS-7090710-SL	SCREW 9/64-40 L=6.8		ﾏﾙﾋﾗﾈｼﾞ 9/64-40 L=6.8	3
59		SM-6042002-SP	SCREW M4X0.7 L=20		ﾛｯｶｸｱﾅﾎﾞﾙﾄ M4X0.7 L=20	1
60		G3109-122-000	CYLINDER STOP STUD		ｲﾄｳｶｼ ｼﾘﾝﾀﾞｰ ﾄﾒｶﾈ	1
61		RE-0300000-KO	SNAP RING 3		Eｶﾞﾀﾄﾒﾜ 3	1
62		G5196-100-00A	QUICK COUPLING		ﾜﾝﾀｯﾁｻﾞﾃ	2
63		G2436-122-000	CYLINDER		ｼﾘﾝﾀﾞｰ	1
64		G3110-122-000	PLUNGER PIN		ｼﾘﾝﾀﾞｰ ｻｷｶﾈ	1
65		G3111-122-000	PLUNGER PIN RECEIVER		ｼﾘﾝﾀﾞｰ ｻｷｶﾈｳｹｲﾀ	1
66		SS-7090750-SP	SCREW 9/64-40 L=7		ｼﾀﾒｽﾄﾘﾂｹﾈｼﾞ	2
67		G5019-100-000	BARBED FITTING JOINT		ﾊﾞｰﾌﾞﾂｷﾞﾃ	2
68		G5108-100-000-A	CYLINDER		ｼﾘﾝﾀﾞｰ (ﾌｸ 10X15)	1
69		G3136-122-000	THREAD GUIDE		ﾁｬﾝﾎﾟﾝ ﾏｴｲﾄﾐﾁ	1
70		SS-7090710-SL	SCREW 9/64-40 L=6.8		ﾏﾙﾋﾗﾈｼﾞ 9/64-40 L=6.8	2

10. BOBBIN WINDER COMPONENTS
糸巻装置関係

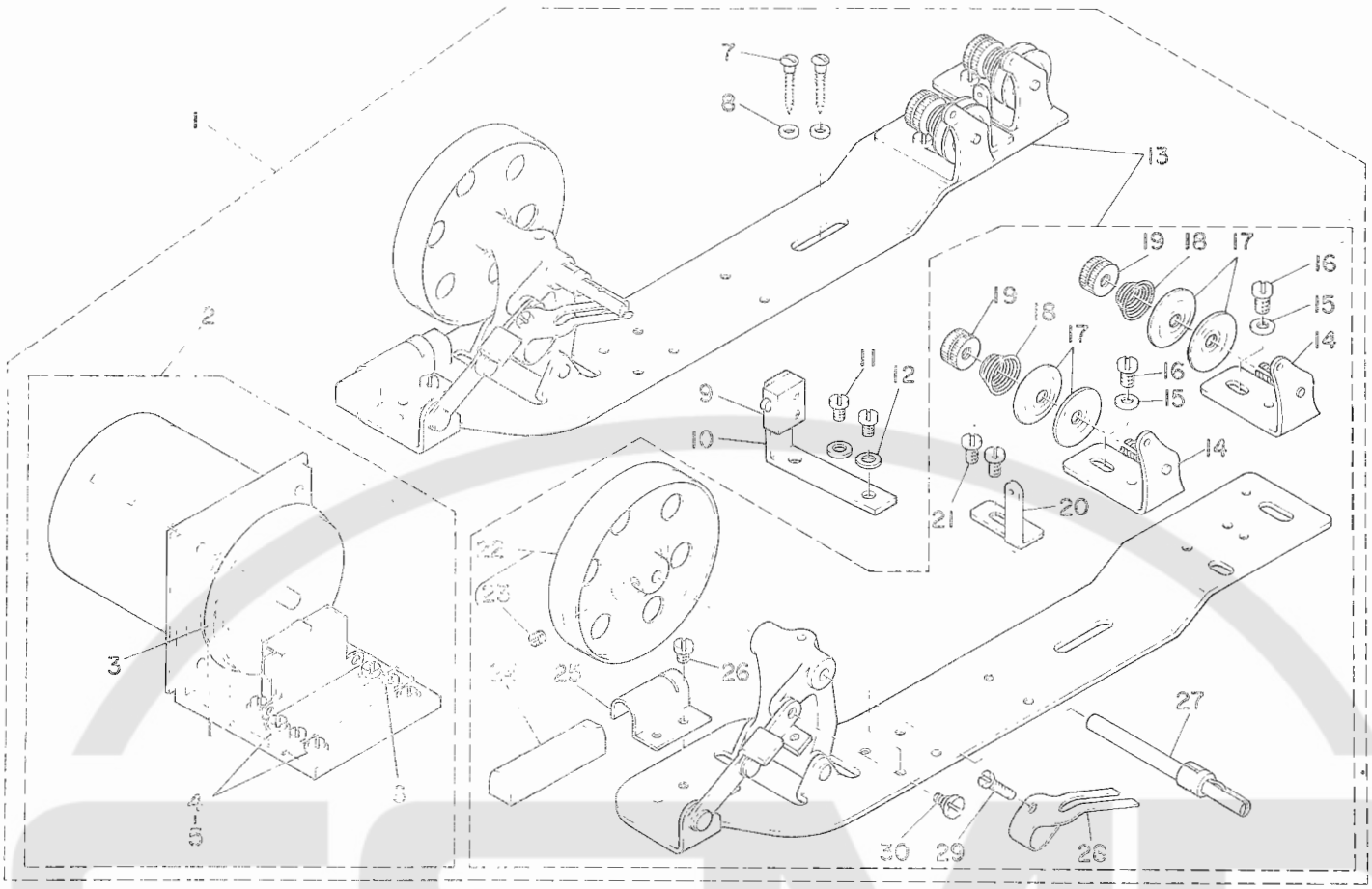

Ref. No.	Note 注記	Part No. 部番	Description	E. C. 変更年月	品名	Asst. Req. 数量
1		G3207-122-060	BOBBIN WINDER UNIT		イトマキユニット クミ	1
2		G3204-122-0A0	BOBBIN WINDER MOTOR BASE ASM.		イトマキモータードダイ クミ	(1)
3		G3206-121-000	RUBBER RING		イトマキ ゴムワ.	(1)
4		SS-7090710-SL	SCREW 9/64-40 L=6.8		マルヒラネジ 9/64-40 L=6.8	(4)
5		WP-0430801-SC	WASHER M4		ヒラダカワ ミカキマル M4	(4)
6		SS-7090610-SL	SCREW 9/64-40 L=4.6		マルヒラネジ 9/64-40 L=4.6	(2)
7		SK-3482700-SC	WOOD SCREW D=4.8 L=25		マルモクネジ D=4.8 L=25	(2)
8		WP-0501016-SC	WASHER 5X10.5X1		ヒラダカワ 5X10.5X1	(2)
9		HA-0011200-00	MICROSWITCH		スイッチ	(1)
10		G3211-122-000	MICROSWITCH BASE		マイクロスイッチ トダイ	(1)
11		SS-7090610-SL	SCREW 9/64-40 L=4.6		マルヒラネジ 9/64-40 L=4.6	(2)
12		WP-0430801-SC	WASHER M4		ヒラダカワ ミカキマル M4	(2)
13		G3207-122-0A0	BOBBIN WINDER ASM.		イトマキユニット クミ	(1)
14		B3223-012-0A0	THREAD TENSION BRACKET ASM.		イトマキ イトテンションダイ クミ	(2)
15		WP-0501016-SC	WASHER 5X10.5X1		ヒラダカワ 5X10.5X1	(2)
16		SS-7110820-SN	SCREW 11/64-40 L=7.5		マルヒラネジ 11/64-40 L=7.5	(2)
17		B3126-012-000	TENSION DISC		イトテンションダラ	(4)
18		B3129-012-000	TENSION SPRING B		イトテンション バネ B	(2)
19		B3125-012-000	THREAD TENSION STUD NUT		イトテンション ナット	(2)
20		G3213-116-000	THREAD GUIDE		イトマキイトアンナイ	(1)
21		SS-7110820-SN	SCREW 11/64-40 L=7.5		マルヒラネジ 11/64-40 L=7.5	(2)
22		B3214-012-0A0	BOBBIN WINDER WHEEL ASM.		イトマキクルマ クミ	(1)
23		SS-8110510-SN	SCREW 11/64-40 L=5		トメネジ 11/64-40 L=5	(1)
24		B3228-012-000	WINDER BRAKE		セイトベルト	(1)
25		B3229-012-000	BRAKE COMP		セイトベルト オサエイタ	(1)
26		SS-7110610-SN	SCREW 11/64-40 L=4		マルヒラネジ 11/64-40 L= 4	(1)
27		G3208-122-0A0	BOBBIN WINDER SHAFT ASM.		イトマキシャク クミ	(1)
28		G3217-116-000	BALANCE PRESSER		ボビンオサエ	(1)
29		SS-7081310-SN	SCREW 1/8-44 L=12.5		マルヒラネジ 1/8-44 L=12.5	(1)
30		SD-0490561-SP	WASHER SCREW D=4.9 H=2.6		ダンネジ D=4.9 H=2.6	(1)

11. BELT-LOOP RECEIVER COMPONENTS
ベルトループ受け関係

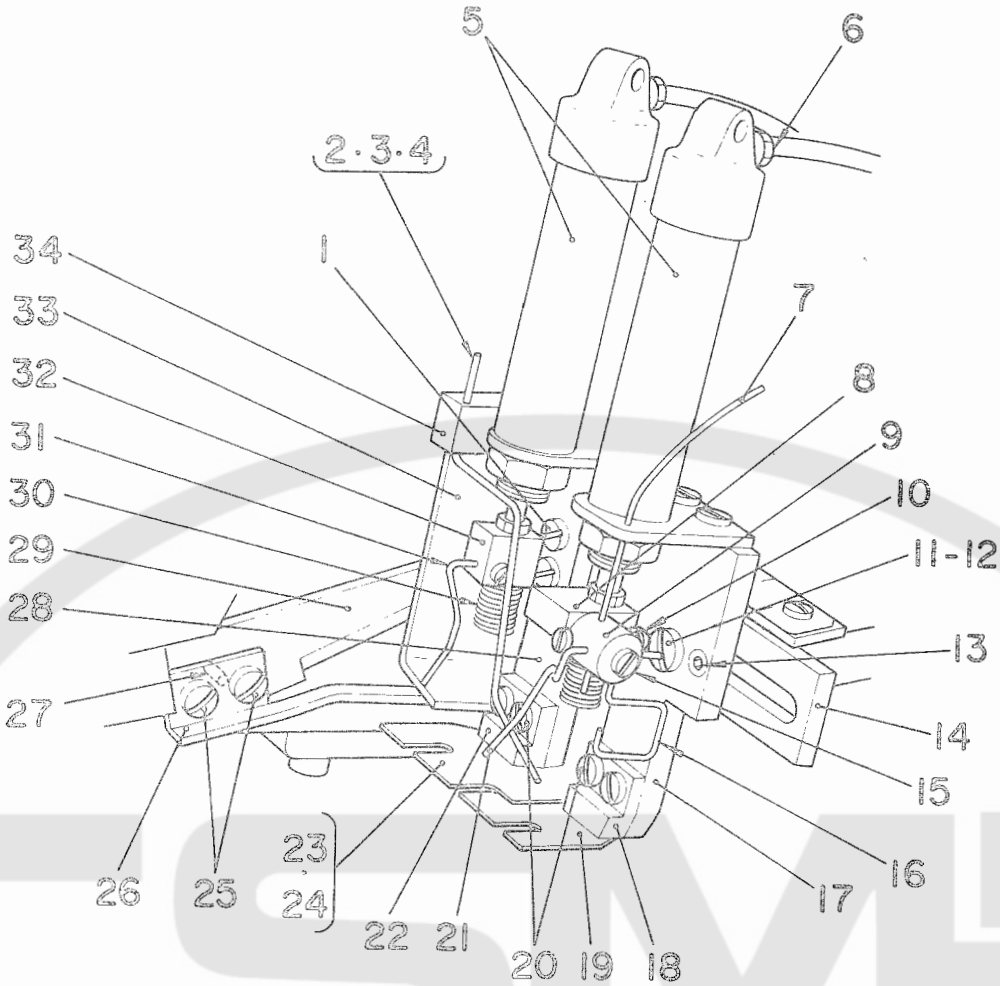

Ref. No.	Note 注記	Part No. 品番	Description	E. C. 変更年月	品名	Amt. Req. 数量
1		SS-6111010-SP	SCREW 11/64-40 L= 9.5		ﾋﾗﾈｼﾞ 11/64-40 L=9.5	2
2	#01	G5153-100-00A	BELT-LOOP UPPER LIMITER PIN		ｳﾜﾊﾞﾝﾄﾞﾙｰﾌﾟ ﾆｹﾞﾄﾞﾒｶﾞﾈ	1
3	#02	G5153-100-00B	BELT-LOOP UPPER LIMITER PIN		ｳﾜﾊﾞﾝﾄﾞﾙｰﾌﾟ ﾆｹﾞﾄﾞﾒｶﾞﾈ	1
4	#03	G5153-100-00C	BELT-LOOP UPPER LIMITER PIN		ｳﾜﾊﾞﾝﾄﾞﾙｰﾌﾟ ﾆｹﾞﾄﾞﾒｶﾞﾈ	1
5		G5166-100-000-A	CYLINDER		ｼﾘﾝﾀﾞｰ (ﾀﾝ 10X25)	2
6		G5019-100-000	BARBED FITTING JOINT		ﾊﾞｰﾌﾞ ﾂｷﾞﾃ	2
7		G5160-100-000	LOOP PRESSURE CYLINDER GUIDE, FRONT		ｵｻｴﾏｴ ｼﾘﾝﾀﾞｰｱﾝﾅｲｶﾞﾈ	1
8		G5169-100-000	LOOP PRESSURE CYLINDER BRACKET		ﾙｰﾌﾟｵｻｴ ﾏｴｼﾘﾝﾀﾞｰｻｷｶﾞﾈ	1
9		G5170-100-000	BELT-LOOP FRONT GUIDE SHAFT		ﾏｴ ｱﾝﾅｲｶﾞﾈｼｬﾌﾄ	1
10		SS-4080610-SP	SCREW 1/8-44 L=6.4		ﾅﾍﾞﾈｼﾞ 1/8-44 L=6.4	2
11		G5162-100-00A	BINDER LOCK NUT PLATE		ﾊﾞｲﾝﾀﾞｰｱｰﾑ ﾄﾒﾅﾂﾄｲﾀ	1
12		SS-7111410-SP	SCREW 11/64-40 L=14		ﾏﾙﾋﾗﾈｼﾞ 11/64-40 L=14	2
13		PS-0500102-KH	SPRING PIN 5.0X10		ｽﾌﾟﾘﾝｸﾞﾋﾟﾝ 5X10	2
14		G5154-122-000	BINDER ADJUSTING RAIL		ﾊﾞｲﾀﾞｱｼﾞｬｽﾄ ﾚｰﾙ	1
15		SS-4080610-SP	SCREW 1/8-44 L=6.4		ﾅﾍﾞﾈｼﾞ 1/8-44 L=6.4	2
16		G5172-100-000	BELT-LOOP PRESSURE GUIDE		ﾊﾞﾝﾄﾞﾙｰﾌﾟ ｵｻｴｶﾅｸﾞ	1
17		G5161-100-00A	BINDER ADJUSTING ARM, FRONT		ﾊﾞｲﾝﾀﾞｰｱｼﾞｬｽﾄｱｰﾑ ﾏｴ	1
18		G5164-100-00A	BINDER L-HEAD PLATE		ﾊﾞｲﾝﾀﾞｰﾄﾘﾂｹ ﾚﾀﾞﾀﾏｴ	1
19		G5165-100-00A	LOOP FRONT RECEIVER		ﾙｰﾌﾟﾏｴｳｹｲﾀ	1
20		SS-7090710-SL	SCREW 9/64-40 L=6.8		ﾏﾙﾋﾗﾈｼﾞ 9/64-40 L=6.8	4
21		G5171-100-000	BELT-LOOP FRONT GUIDE		ﾊﾞﾝﾄﾞﾙｰﾌﾟ ﾏｴｱﾝﾅｲｶﾞﾈ	1
22		G5157-122-000	BINDER L-HEAD PLATE, REAR		ﾊﾞｲﾀﾞ ﾄﾘﾂｹLｶﾀｳｼﾛ	1
23	#04	G5158-122-00A	LOOP REAR RECEIVER		ﾙｰﾌﾟｳｼﾛｳｹｲﾀ 41	1
24	#05	G5158-122-00B	LOOP REAR RECEIVER		ﾙｰﾌﾟｳｼﾛｳｹｲﾀ 60	1
25		SS-6111210-SP	SCREW 11/64-40 L=12		ﾋﾗﾈｼﾞ 11/64-40 L=12	2
26		G5192-100-000	BELT-LOOP LOWER GUIDE		ｼﾀﾊﾞﾝﾄﾞﾙｰﾌﾟ ﾆｹﾞﾄﾞﾒ	1
27		PS-0300242-KO	SPRING PIN 3.0X24		ｽﾌﾟﾘﾝｸﾞﾋﾟﾝ 3.0X24	1
28		G5156-100-000	BINDER ARM, REAR		ﾊﾞｲﾝﾀﾞｰｱｰﾑ ｳｼﾛ	1
29		G5305-100-00A	UPPER KNIFE		ｳｺﾞｷ ﾒｽ (ﾊｲｽ)	1
30		G5168-100-000	PRESSER SPRING		ﾊﾞﾝﾄﾞﾙｰﾌﾟ ｵｻｴﾊﾞﾈ	2
31		G5173-100-000	BELT-LOOP REAR GUIDE		ﾊﾞﾝﾄﾞﾙｰﾌﾟ ｳｼﾛｱﾝﾅｲｶﾞﾈ	1
32		G5224-100-000	LOOP PRESSUR CYLINDER BRACKET		ﾙｰﾌﾟｵｻｴｳｼﾛ ｼﾘﾝﾀﾞｰｻｷｶﾞﾈ	1
33		G5151-100-000	BELT-LOOP UPPER LIMITER		ｳﾜﾊﾞﾝﾄﾞﾙｰﾌﾟ ﾆｹﾞﾄﾞﾒ	1
34		G5152-100-000	BELT-LOOP INSTALLING PLATE		ﾆｹﾞﾄﾞﾒ ﾄﾘﾂｹｶﾞﾈ	1

Note (注記) #01 ..... For 55 ~ 62 mm (2-11/64" ~ 2-7/16") 55～62mm用
#02 ..... For 63 ~ 70 mm (2-31/64" ~ 2-3/4") 63～70mm用
#03 ..... For 71 ~ 78 mm (2-51/64" ~ 3-5/64") 71～78mm用
#04 ..... For 41 ~ 65 mm (1-5/8" ~ 2-9/16") 41～65mm用
#05 ..... For 60 ~ 78 mm (2-23/64" ~ 3-5/64") 60～78mm用

12. BELT-LOOP SUPPLY COMPONENTS (1)
ベルトループ供給関係(1)

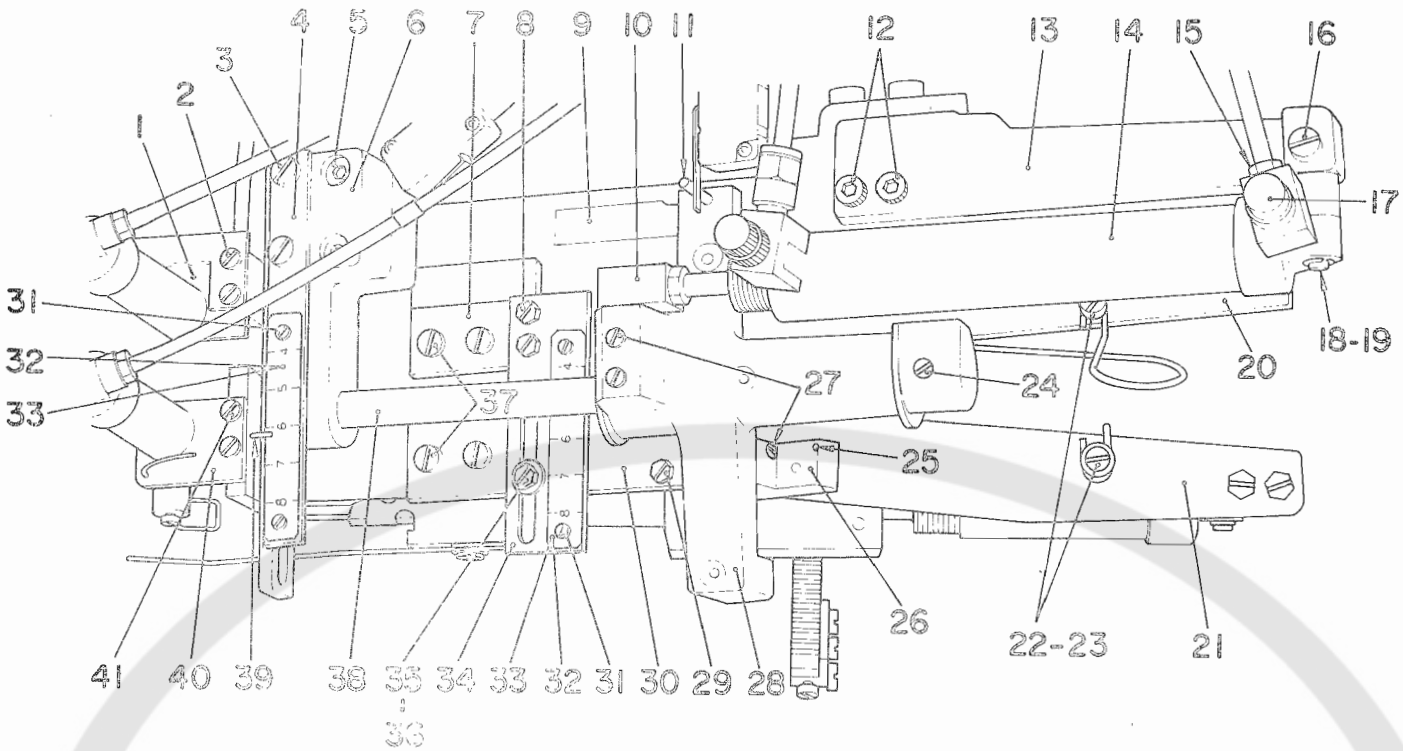

Ref. No.	Note 注記	Part No. 品番	Description	E. C. 変更年月	品名	Amt. Req. 数量
1		G5155-100-00A	CYLINDER PLATE, REAR		ウシロシリンダー トリツケカネ	1
2		G5009-100-000	SCREW		トメネジ	2
3		SS-6111010-SP	SCREW 11/64-40 L= 9.5		ヒラネジ 11/64-40 L=9.5	2
4		G5177-100-00A	BINDER SCALE BASE		バインダーメモリイタ トダイ	1
5		SM-6052002-TP	SCREW M5 L=20		ロツカクアナボルト M5X0.8 L=20	2
6		G5174-100-00A	ADJUSTING RAIL BASE		アジヤストレール トダイ	1
7		G5283-100-00A	BELT-LOOP SUPPLY PLATE, REAR		ウシロ キヨーキユーイタ	1
8		G5027-100-000	SCREW 11/64-40 L=8		トメネジ	2
9		G5183-100-000	BELT-LOOP SUPPLY CAM		バントループ キヨーキユーカム	1
10		G5193-100-000	BELT-LOOP SUPPLY CYLINDER BRACKET		キヨーキユーシリンダー サキガネ	1
11		PS-0500262-KO	SPRING PIN 3.0X24		スプリングピン 3.0X24	1
12		SM-6052002-TP	SCREW M5 L=20		ロツカクアナボルト M5X0.8 L=20	2
13		G5188-100-000	BELT-LOOP MOVING CYLINDER BASE		サユウ イドーシリンダー トダイ	1
14		G5194-100-000-A	CYLINDER		シリンダー (フク 16X100)	1
15		G5019-100-000	BARBED FITTING JOINT		バーブ ツキテ	1
16		SS-7110840-SP	SCREW 11/64-40 L=7.8		マルヒラネジ 11/64-40 L=7.8	1
17		GHP-03524000	UNIVERSAL ELBOW M5		エルボ M5	1
18		G5186-100-000	MOVING CYLINDER PIN		キヨーキユーシリンダー レンケツカネ	1
19		RE-0500000-KO	SNAP RING 5		Eカタトメワ 5	1
20		G5269-100-000	FOLDER ROTATION CYL. PLATE, REAR		ウシロ オリマケシリンダー トダイ	1
21		G5268-100-00A	CYL. PLATE, FRONT		マエオリマケ シリンダートダイ	1
22		SS-7090710-SL	SCREW 9/64-40 L=6.8		マルヒラネジ 9/64-40 L=6.8	2
23		WP-0450801-SD	WASHER 4.5X10.0X0.8		ヒラザカネ 4.5X10X0.8	2
24		SS-8150510-SP	SCREW 15/64-28 L=5		トメネジ	2
25		PS-0200142-KO	SPRING PIN 2.0X14		スプリングピン 2.0X14	2
26		G5266-100-000	BELT-LOOP SUPPLY LEVER		バントループ キヨーキユーレバー	1
27		SS-8150310-SP	SCREW 15/64-28 L=8		トメネジ 15/64-28 L=7.5	3
28		G5185-122-000	BELT-LOOP SUPPLY SLEEVE		キヨウキユウイトウメタル	1
29		SS-6111010-SP	SCREW 11/64-40 L= 9.5		ヒラネジ 11/64-40 L=9.5	2
30		G5256-100-00A	BELT-LOOP SUPPLY PLATE, FRONT		マエキヨーキユーイタ	1
31		SS-6060220-SP	SCREW 3/32-56 L= 2.0		ヒラネジ 3/32-56 L=2	4
32	#01	G5122-100-000	SCALE		メモリイタ (ミリ ヒヨーシ)	2
33	#02	G5122-100-00A	SCALE		メモリイタ (インチヒヨーシ)	2
34		G5255-122-000	CONNECTING PLATE		キヨウキユウイタレンケツカネ	1
35		G5027-100-000	SCREW 11/64-40 L=8		トメネジ	1
36		WP-0450801-SD	WASHER 4.5X10.0X0.8		ヒラザカネ 4.5X10X0.8	1
37		SS-6111010-SP	SCREW 11/64-40 L= 9.5		ヒラネジ 11/64-40 L=9.5	4
38		G5184-100-000	BELT-LOOP SUPPLY SLEEVE SHAFT		サユウ イドーメタル シヤフト	1
39		PS-0160122-KH	SPRING PIN 1.6X12		スプリングピン 1.6X12	1
40		G5159-100-000	LOOP PRESSURE CYLINDER PLATE, FRONT		ループオサエ マエシリンダートリツケイタ	1
41		SS-7090710-SL	SCREW 9/64-40 L=6.3		マルヒラネジ 9/64-40 L=6.8	2

Note (注記) #01 ..... For indicated meter — メートル表示用
#02 ..... For indicated inch — インチ表示用

13. BELT-LOOP SUPPLY COMPONENTS (2)
ベルトループ供給関係(2)

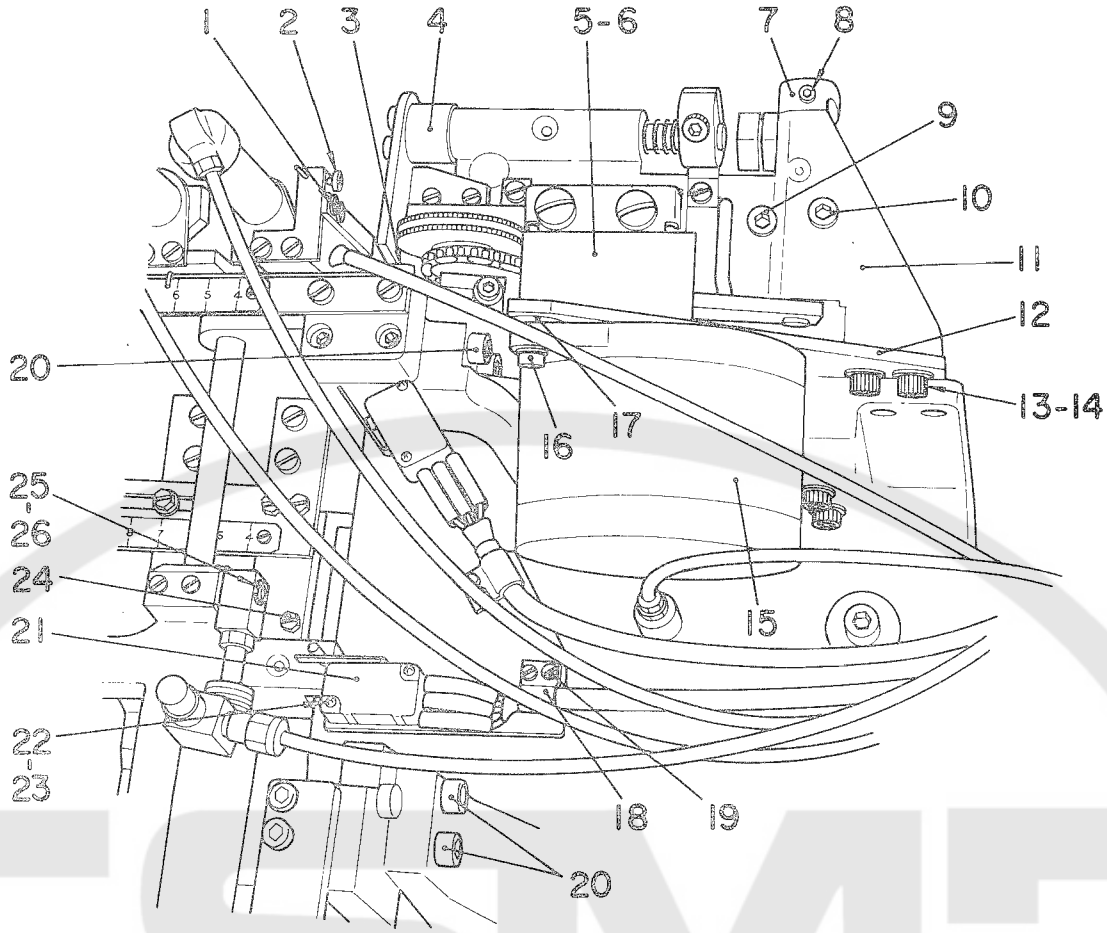

Ref. No.	Note 注記	Part No. 品番	Description	E. C. 変更年月	品名	Amt. Req. 数量
1		SS-7090710-SL	SCREW 9/64-40 L=6.3		マルヒラネジ 9/64-40 L=6.3	2
2		SS-7090710-SL	SCREW 9/64-40 L=6.3		マルヒラネジ 9/64-40 L=6.3	1
3		SM-6051202-TP	SCREW M5X0.8 L=12		ロツカクアナボルト M5X0.8 L=12	2
4		G5303-100-00A	UPPER KNIFE ROD		ウコボキ メスロツト	1
5		G5717-100-000	CHAIN COVER		チエーンカバー	1
6		SS-7090510-SL	SCREW 9/64-40 L=4.6		マルヒラネジ 9/64-40 L=4.6	1
7		G5706-100-000	LEVER SHAFT COLLAR		コーラーレバーシヤフト カラー	1
8		SM-8060602-TP	SCREW M6X6		トメネジ M6 L=6	2
9		SM-6061552-SP	SCREW M6 L=15		ロツカクアナボルト M6 L=15	1
10		SM-6063012-CP	SCREW M6 L=30		ロツカクアナボルト M6 L=30	1
11		G5302-100-008	LOOP FEEDING BASE		オクリダシ トダイ	1
12		G5710-100-000	LOOP FEEDING MOTOR PLATE		ループ オクリダシモータ トリツケイタ	1
13		SM-6061002-TP	SCREW M6 L=10		ロツカクアナボルト M6 L=10	2
14		WP-0651001-SB	WASHER		ヒラサガネ ミカキマル M6	2
15		G5709-100-0A0	LOOP FEEDING MOTOR ASM.		ループ オクリダシモータ	1
16		SM-6051602-TP	SCREW M5X0.8 L=16		ロツカクアナボルト M5X0.8 L=16	3
17		B2107-816-000	WASHER		ロツド ケガネ	3
18		G5012-100-000	CORD HOLDER		コード トメ	2
19		SS-4080610-SP	SCREW 1/8-44 L=6.4		ナベネジ 1/8-44 L=6.4	4
20		SM-6062002-TP	SCREW M6 L=20		ロツカクアナボルト M6 L=20	4
21		G5031-100-000	MICROSWITCH		スイツチ	2
22		SM-4861601-SC	SCREW M2.6 L=16		ナベコネジ M2.6 L=16	4
23		G5039-100-000	MICROSWITCH NUT PLATE		マイクロスイツチ ナツトイタ	2
24		SS-6111010-SP	SCREW 11/64-40 L=9.5		ヒラネジ 11/64-40 L=9.5	2
25		G5195-100-000	CYLINDER CONNECTING PIN		サユーイトー シリンダーピン	1
26		RE-0500000-KC	SNAP RING 5		ミカタトメワ 5	1

14. BELT-LOOP FOLD COMPONENTS
ベルトループ折り曲げ関係

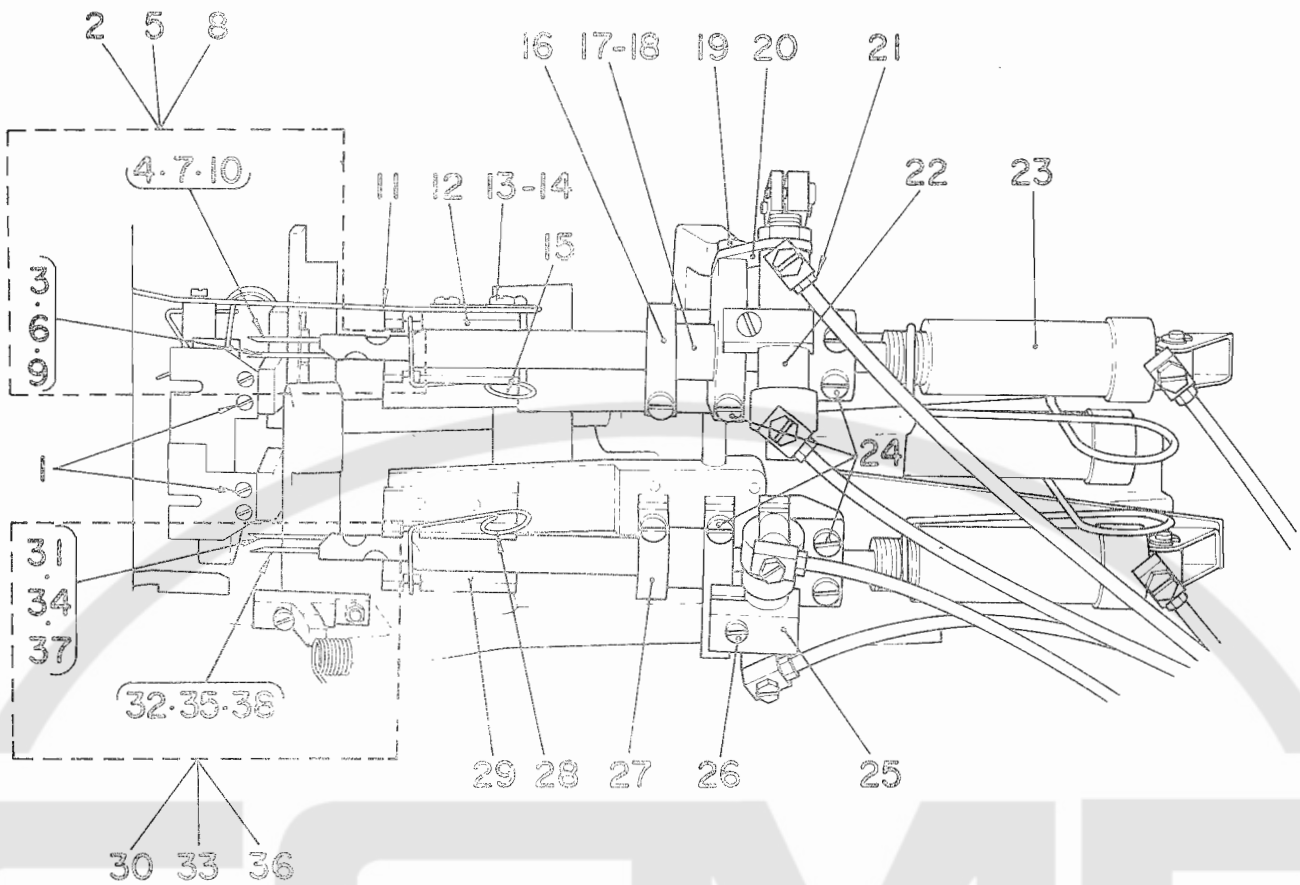

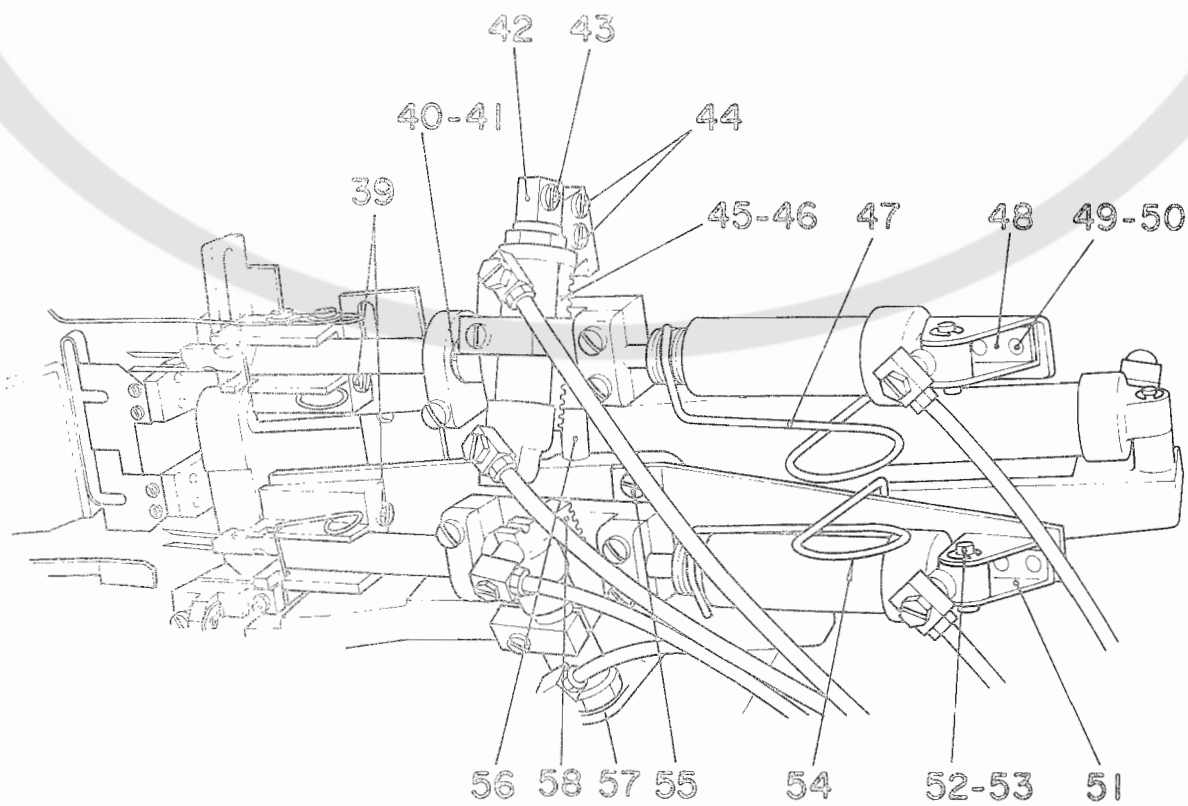

Ref. No.	Note 注記	Part No. 品番	Description	E. C. 変更年月	品名	Q'ty 数量
1		SS-6080410-SP	SCREW 1/8-44 L=4		ﾋﾗﾈｼﾞ 1/8-44 L=4	4
2	#01	G5253-100-0A0	FRONT FOLDER SHAFT ASM. 2.7		ﾏｴｵﾘﾏｹﾞｶﾞﾈｼｬﾌﾄ ｸﾐ 2.7	1
3		G5290-100-000	UPPER FOLDER SHAFT PIN 2.0 2.7MM		ｳﾜｼｬﾌﾄ ﾋﾟﾝ	1
4		G5253-100-000	LOWER FOLDER SHAFT PIN		ｼﾀｵﾘﾏｹﾞ ｼｬﾌﾄﾋﾟﾝ	1
5	#02	G5253-100-0AA	FRONT FOLDER SHAFT ASM. 2.0		ﾏｴｵﾘﾏｹﾞｶﾞﾈｼｬﾌﾄ ｸﾐ 2.0	1
6		G5290-100-000	UPPER FOLDER SHAFT PIN 2.0 2.7MM		ｳﾜｼｬﾌﾄ ﾋﾟﾝ	1
7		G5253-100-000	LOWER FOLDER SHAFT PIN		ｼﾀｵﾘﾏｹﾞ ｼｬﾌﾄﾋﾟﾝ	1
8	#03	G5253-100-0A8	FRONT FOLDER SHAFT ASM. 3.2		ﾏｴｵﾘﾏｹﾞ ｼｬﾌﾄ ｸﾐ	1
9		G5295-100-000	PIN 3.2MM		ｳﾜｼｬﾌﾄﾋﾟﾝ	1
10		G5253-100-000	LOWER FOLDER SHAFT PIN		ｼﾀｵﾘﾏｹﾞ ｼｬﾌﾄﾋﾟﾝ	1
11		G5251-100-000	FRONT AUXILIARY GUIDE PIN		ﾏｴﾈｼﾞｮｳ ｵｳｴｶﾞﾈ	1
12		G5252-100-000	HOLDER SHAFT GUIDE SLEEVE		ﾏｴｵﾘﾏｹﾞｶﾞﾈｼｬﾌﾄ ｱﾝﾅｲﾒﾀﾙ	1
13		SS-7090510-SL	SCREW 9/64-40 L=4.6		ﾏﾙﾋﾗﾈｼﾞ 9/64-40 L=4.6	2
14		WP-0450801-SD	WASHER 4.5X10.0X0.8		ﾋﾗｻﾞｶﾞﾈ 4.5X10X0.8	2
15		G5277-100-000	FRONT FOLDER SHAFT SPRING		ﾏｴｵﾘﾏｹﾞｶﾞﾈ ﾊﾞﾈ	1
16		G5259-100-000	FRONT FOLDER SHAFT PIVOT SLEEVE		ﾏｴｵﾘﾏｹﾞｼｬﾌﾄ ｼﾃﾝﾒﾀﾙ	1
17		G5258-100-000	PINION COLLAR		ｵﾘﾏｹﾞ ﾋﾟﾆｵﾝｶﾗｰ	1
18		SS-8090710-SP	SCREW 9/64-40 L= 7.0		ﾄﾒﾈｼﾞ 9/64-40 L=7	1
19		SS-7110840-SP	SCREW 11/64-40 L=7.8		ﾏﾙﾋﾗﾈｼﾞ 11/64-40 L=7.8	1
20		G5262-100-00A	LOOP FOLDER CYLINDER PLATE		ｵﾘﾏｹﾞｼﾘﾝﾀﾞｰ ﾄﾘﾂｹｲﾀ	1
21		GMP-03524000	UNIVERSAL ELBOW M5		ｴﾙﾎﾞﾏﾞ M5	1
22		G5286-100-000-B	CYLINDER		ｼﾘﾝﾀﾞｰ	1
23		G5270-100-000-A	CYLINDER		ｼﾘﾝﾀﾞｰ (ｸﾗﾝ 16X25)	1
24		SS-7111410-SP	SCREW 11/64-40 L=14		ﾏﾙﾋﾗﾈｼﾞ 11/64-40 L=14	1
25		G5241-100-000	RACK GEAR HOLDER		ﾗｯｸｷﾞﾔ ｱﾃｶﾞﾈ	1
26		G5000-100-000	SCREW		ﾄﾒﾈｼﾞ	1
27		G5282-100-000	REAR FOLDER SHAFT PIVOT SLEEVE		ｳｼﾛｵﾘﾏｹﾞｼｬﾌﾄ ｼﾃﾝﾒﾀﾙ	1
28		G5278-100-000	REAR FOLDER SHAFT SPRING		ｳｼﾛｵﾘﾏｹﾞ ｶｹﾊﾞﾈ	1
29		G5279-100-000	REAR FOLDER SHAFT GUIDE SLEEVE		ｳｼﾛｵﾘﾏｹﾞｼｬﾌﾄ ｱﾝﾅｲﾒﾀﾙ	1
30	#01	G5254-100-0A0	REAR FOLDER SHAFT ASM. 2.7		ｳｼﾛｵﾘﾏｹﾞｶﾞﾈ 2.7 ｸﾐ	1
31		G5290-100-000	UPPER FOLDER SHAFT PIN 2.0 2.7MM		ｳﾜｼｬﾌﾄ ﾋﾟﾝ	1
32		G5253-100-000	LOWER FOLDER SHAFT PIN		ｼﾀｵﾘﾏｹﾞ ｼｬﾌﾄﾋﾟﾝ	1
33	#02	G5254-100-0AA	REAR FOLDER SHAFT ASM. 2.0		ｳｼﾛｵﾘﾏｹﾞｶﾞﾈ 2.0 ｸﾐ	1
34		G5290-100-000	UPPER FOLDER SHAFT PIN 2.0 2.7MM		ｳﾜｼｬﾌﾄ ﾋﾟﾝ	1
35		G5253-100-000	LOWER FOLDER SHAFT PIN		ｼﾀｵﾘﾏｹﾞ ｼｬﾌﾄﾋﾟﾝ	1
36	#03	G5254-100-0A8	REAR FOLDER SHAFT ASM. 3.2		ｳｼﾛｵﾘﾏｹﾞｶﾞﾈ 3.2 ｸﾐ	1
37		G5295-100-000	PIN 3.2MM		ｳﾜｼｬﾌﾄﾋﾟﾝ	1
38		G5253-100-000	LOWER FOLDER SHAFT PIN		ｼﾀｵﾘﾏｹﾞ ｼｬﾌﾄﾋﾟﾝ	1
39		SS-7090710-SL	SCREW 9/64-40 L=6.3		ﾏﾙﾋﾗﾈｼﾞ 9/64-40 L=6.8	1
40		G5257-100-000	LOOP FOLDER SHAFT BEARING		ｵﾘﾏｹﾞｼｬﾌﾄ ｼﾃﾝﾍﾞｱﾘﾝｸﾞ	1
41		RC-1700002-KP	RETAINING RING 17		Cｶﾞﾀﾄﾒﾜ 17	1
42		G5264-100-000	RACK GEAR PLATE, FRONT		ﾏｴｵﾘﾏｹﾞﾗｯｸｷﾞﾔ ﾄﾘﾂｹｶﾞﾈ	1
43		G5009-100-000	SCREW		ﾄﾒﾈｼﾞ	1
44		G5009-100-000	SCREW		ﾄﾒﾈｼﾞ	1
45		G5263-100-000	PINION		ｵﾘﾏｹﾞ ﾋﾟﾆｵﾝｷﾞﾔ	1
46		G5265-100-00A	RACK GEAR		ｵﾘﾏｹﾞ ﾗｯｸｷﾞﾔ	1
47		G5271-100-000	FOLDER ROTATION CYL. SPRING, FRONT		ﾏｴｵﾘﾏｹﾞｼﾘﾝﾀﾞｰ ﾊﾞﾈ	1
48		G5275-100-000	FOLDER ROTATION CYLINDER NUT PLATE		ｵﾘﾏｹﾞｼﾘﾝﾀﾞｰ ﾄﾘﾂｹｶｸﾞﾅｯﾄ	1
49		G5027-100-000	SCREW 11/64-40 L=8		ﾄﾒﾈｼﾞ	1
50		WP-0450801-SD	WASHER 4.5X10.0X0.8		ﾋﾗｻﾞｶﾞﾈ 4.5X10X0.8	1
51		G5273-100-000	CYLINDER INSTALLING PLATE		ｺﾔﾏ ﾄﾘﾂｹｶｸｸﾞ	1
52		G5274-100-000	CYLINDER HOLDING PIN		ﾄﾒﾋﾟﾝ	1
53		RE-0400000-KO	SNAP RING 4		Eｶﾞﾀﾄﾒﾜ 4	1
54		G5272-100-000	FOLDER ROTATION CYL. SPRING, REAR		ｳｼﾛ ｵﾘﾏｹﾞｼﾘﾝﾀﾞｰ ﾊﾞﾈ	1
55		SS-6111010-SP	SCREW 11/64-40 L= 9.5		ﾋﾗﾈｼﾞ 11/64-40 L=9.5	1
56		G5187-122-000	SUPPLY CAM LEVER SHAFT		ｷﾖｳｷｭｳｶﾑﾚﾊﾞｰｼｬﾌﾄ	1
57		G5262-100-000	LOOP FOLDER CYLINDER PLATE		ｵﾘﾏｹﾞｼﾘﾝﾀﾞｰ ﾄﾘﾂｹｲﾀ	1
58		G5265-100-000	RACK GEAR		ｵﾘﾏｹﾞ ﾗｯｸｷﾞﾔ	1

Note (注記) #01 ..... For 2.7 mm (7/64") — 2.7mm用
(Standard) — (標準)
#02 ..... For 2.0 mm (5/64") — 2.0mm用
(For light weight materials) — (うす物用)
#03 ..... For 3.2 mm (1/8") — 3.2mm用
(For heavy weight materials) — (厚物用)

15. BELT-LOOP FEED COMPONENTES
ベルトループ送り出し関係

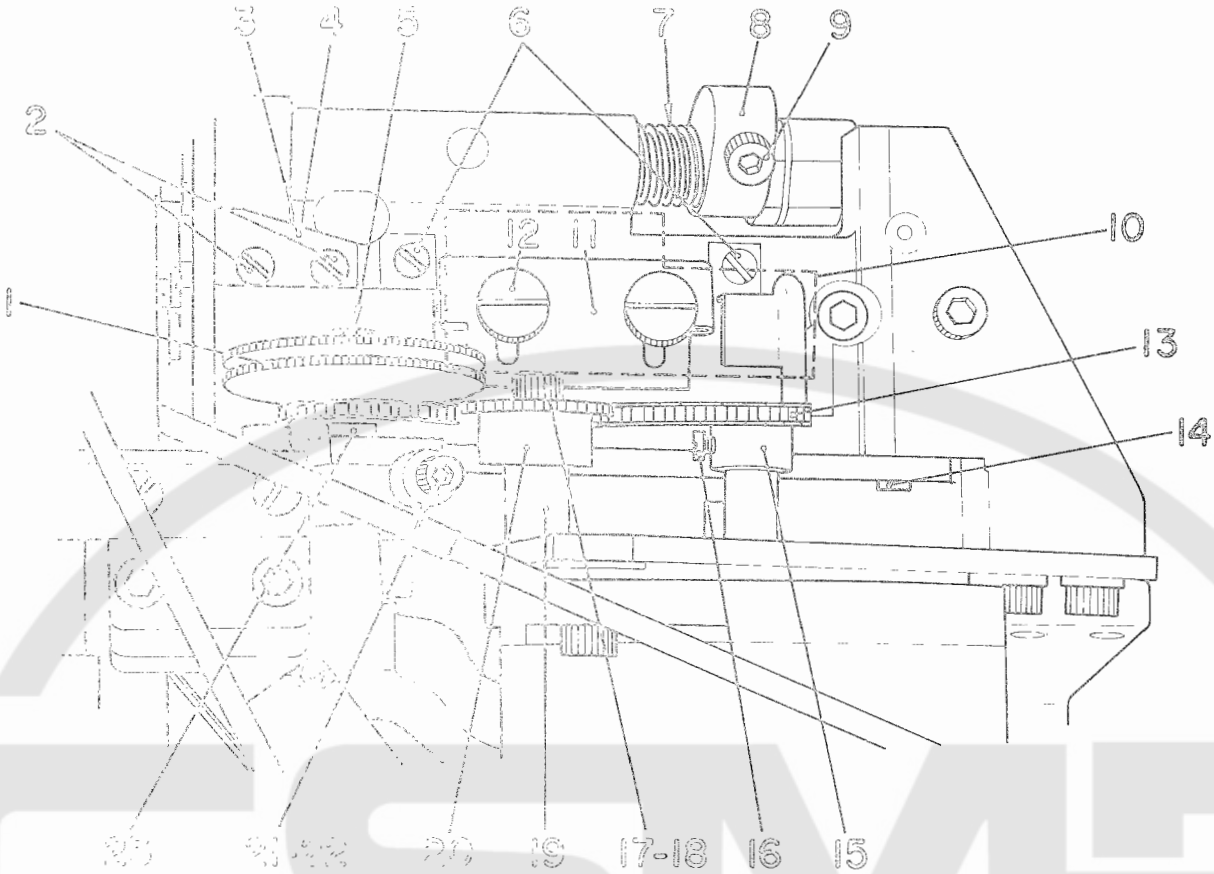

Ref. No.	Note 注記	Part No. 品番	Description	E. C. 変更年月	品名	Amt. Req. 数量
2		65712-100-000	ROLLER ASM.		オクリダシ ローラ クミ	1
3		SS-409070-SL	SCREW 9/64-40 L=6.8		マルヒラネジ 9/64-40 L=6.8	2
5		65701-100-000	LOWER KNIFE		コテイ メス (ヒヨーシダエン)	1
5	#01	65701-100-00A	LOWER KNIFE		コテイ メス (チヨーコー	1
6		SM-205200Z-TP	SCREW M5 L=20		ロツカクアナボルト M5X0.8 L=20	1
6		SS-409070-SL	SCREW 9/64-40 L=6.6		マルヒラネジ 9/64-40 L=4.6	2
7		65307-100-000	UPPER KNIFE ROD SPRING		ウコボキ メスロツドバネ	1
8		65340-100-000	UPPER KNIFE SHAFT LEVER		ウコボキ メスシヤフトレバー	1
9		SM-205200Z-TP	SCREW M5 L=20		ロツカクアナボルト M5X0.8 L=20	1
10		65721-100-0A0	ADJUSTING BINDER ASM.		アジヤストバインダー クミ	1
11		65722-100-000	TRAVELLING GAUGE		バインダー イトーシダヨーキ	(1)
11		65723-100-000	SCREW		バインダー ハバキメネジ	(2)
12		65708-100-000	MICROCHECK		マイクロチエーン	1
13		65705-100-000	LOOP FEEDING ROLLER LEVER SHAFT		オクリダシ ローラーレバーシヤフト	1
14		65718-100-000	MOTOR SPROCKET		ループ オクリダシモータ スプロケツト	1
14		SS-408070-SL	SCREW 1/8-44 L=6.4		ナベネジ 1/8-44 L=6.4	2
15		SM-205200Z-TP	SCREW M5X0.8 L=28		ロツカクアナボルト M5X0.8 L=28	1
16		92107-816-000	WASHER		ロツドザカネ	1
17		65716-100-000	COLLAR		チユーカン スプロケツトベアリングカラー	1
18		65714-100-0A0	ROLLER ASM.		チユーカン スプロケツト クミ	1
19		SM-204400Z-TP	SCREW M4 L=40		ロツカクアナボルト M4X0.7 L=40	1
20		SS-408070-SL	SCREW 1/8-44 L=6.4		ナベネジ 1/8-44 L=6.4	1
21		65713-100-000	COLLAR		ローラ ベアリング カラー	1

Note (注記) #01 ..... Special replacement (Cemented carbide) 特別注文部品(超硬)

16. BELT-LOOP SUPPLY BASE COMPONENTS
ベルトループ供給土台関係

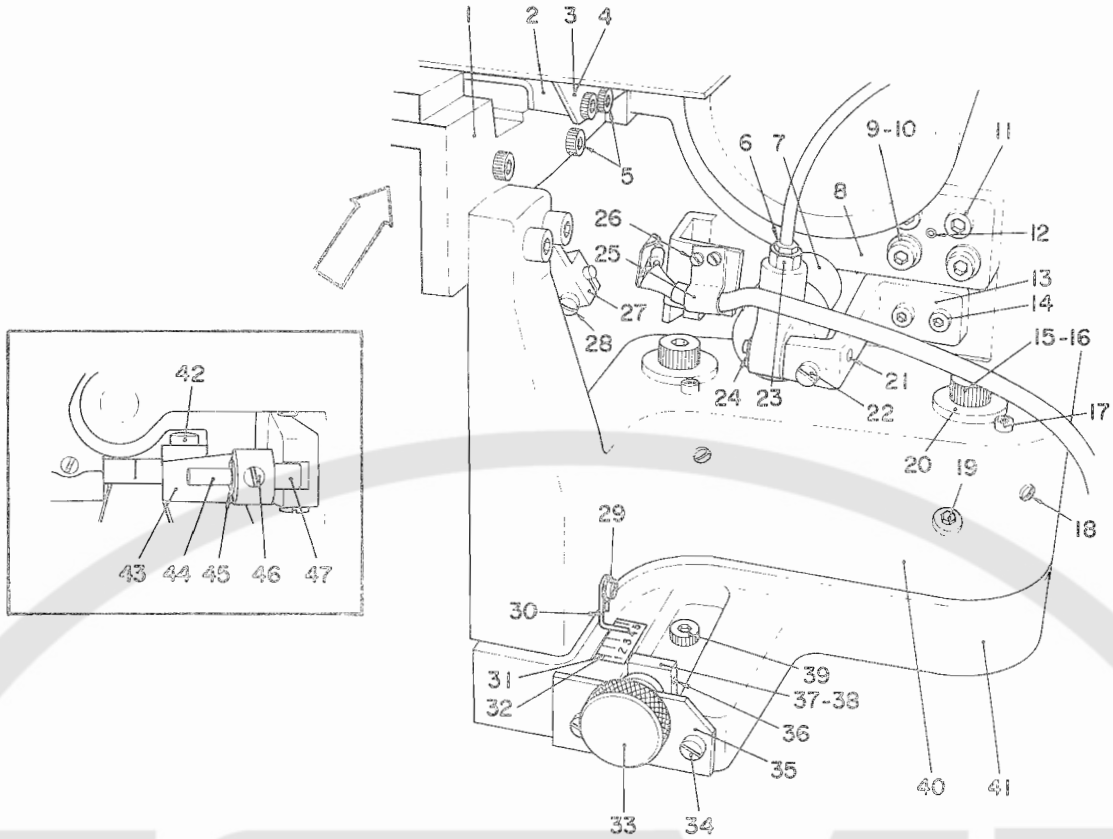

Ref. No.	Note 注記	Part No. 品番	Description	E. C. 変更年月	品名	Amt. Req. 数量
1		G5381-100-000	BELT-LOOP SUPPLY SLEEVE		ﾊﾞﾝﾄﾞﾙｰﾌﾟ ｷｮｰｷｭｰﾒﾀﾙ	1
2		G5182-100-000	BELT-LOOP SUPPLY SLEEVE GUIDE		ｷｮｰｷｭｰ ｽﾘｰｲﾄﾞｶﾞｲﾄﾞ	1
3		G5181-100-000	MICROSWITCH PLATE		ｷｮｰｷｭｰ ﾏｲｸﾛｽｲｯﾁﾄﾘﾂｹｲﾀ	1
4	#03	G5181-122-000	MICROSWITCH PLATE		ｷｮｳｷｭｳ ﾏｲｸﾛｽｲｯﾁ ﾄﾘﾂｹｲﾀ	1
5		SM-6051202-TP	SCREW M5X0.8 L=12		ﾛｯｶｸｱﾅﾎﾞﾙﾄ M5X0.8 L=12	4
6		G5019-100-000	BARBED FITTING JOINT		ﾊﾞｰﾌﾞﾂｷﾞﾁ	1
7		G5021-100-008-A	CYLINDER		ｼﾘﾝﾀﾞｰ (ﾌｸ 20X25)	1
8		G5382-100-000	BELT-LOOP SUPPLY BASE		ｷｮｰｷｭｰﾒﾀﾙ ﾄﾘﾂｹﾄﾞﾀﾞｲ	1
9		SM-6065002-TP	SCREW M6 L=50		ﾛｯｶｸｱﾅﾎﾞﾙﾄ M6 L=50	2
10		WP-0651001-SB	WASHER		ﾋﾗｻﾞｶﾞﾈ ﾐｶﾞｷﾏﾙ M6	2
11		SM-6063002-TP	SCREW M6 L=30		ﾛｯｶｸｱﾅﾎﾞﾙﾄ	2
12		PS-0300102-KO	SPRING PIN 3.0X10		ｽﾌﾟﾘﾝｸﾞﾋﾟﾝ 3.0X10	1
13		G5353-100-008	UPPER KNIFE CYLINDER BASE		ｳｴﾞｷ ﾒｽｼﾘﾝﾀﾞｰﾄﾞﾀﾞｲ	1
14		SM-6051602-TP	SCREW M5X0.8 L=16		ﾛｯｶｸｱﾅﾎﾞﾙﾄ M5X0.8 L=16	2
15		G5383-100-000	DEVICE BASE LOCK NUT		ｿｰﾁﾄﾙﾂｹﾀﾞｲ ｺﾃｲﾅｯﾄﾊﾞﾝ	1
16		SM-6082042-TP	SCREW M8 L=120		ﾛｯｶｸｱﾅﾎﾞﾙﾄ M8 L=120	2
17		G5373-100-000	SCREW		ｿｰﾁ ﾄﾘﾂｹﾄﾞﾀﾞｲ ﾁｮｰｾｲﾈｼﾞ	2
18		SS-8151550-SP	SCREW 15/64-28 L=15		ﾄﾒﾈｼﾞ 15/64-28 L=15	2
19		SM-6061552-SP	SCREW M6 L=15		ﾛｯｶｸｱﾅﾎﾞﾙﾄ M6 L=15	4
20		G5371-100-000	DEVICE BASE LOCK SHAFT		ｿｰﾁ ﾄﾘﾂｹﾄﾞﾀﾞｲ ｺﾃｲｼｬﾌﾄ	2
21		G5352-100-00A	UPPER KNIFE CYLINDER PIN		ｳｴﾞｷ ﾒｽｼﾘﾝﾀﾞｰﾋﾟﾝ	1
22		SS-7111120-SP	SCREW 11/64-40 L=10.5		ﾏﾙﾋﾗﾈｼﾞ 11/64-40 L=10.5	1
23		GHP-0352500C0	BUSHING PT 1/8-M5		ﾌﾞｯｼｭ PT1/8-M5	1
24		RE-0400000-KO	SNAP RING 4		Eｶﾞﾀﾄﾒﾜ 4	1
25		G5376-100-000	SWITCH CORD HOLDER		ﾂｷﾞﾒｹﾝｼｭﾂ ｺｰﾄﾞﾄﾒ	1
26		SS-4080610-SP	SCREW 1/8-44 L=6.4		ﾅﾍﾞﾈｼﾞ 1/8-44 L=6.4	2
27		G5276-100-000	RACK GEAR INSTALLING PLATE, REAR		ｳｼﾛｵﾘﾏｹﾞ ﾗｯｸｷﾞｬ ﾄﾘﾂｹｶﾞﾈ	1
28		G5009-100-000	SCREW		ﾄﾒﾈｼﾞ	1
29		SS-7090510-SL	SCREW 9/64-40 L=4.6		ﾏﾙﾋﾗﾈｼﾞ 9/64-40 L=4.6	1
30		G5369-100-00A	LOOP WIDTH ADJUSTING POINTER		ﾙｰﾌﾟﾊﾊﾞ ﾁｮｰｾﾂｼｼﾞｲﾀ	1
31	#01	G5370-100-000	SCALE		ﾒﾓﾘｲﾀ	1
32	#02	G5370-100-00A	SCALE		ﾒﾓﾘｲﾀ	1
33		G5002-122-000	KNOB		ｷｮｳｷｭｳｿｳﾁｲﾄﾞｳﾈｼﾞ	1
34		SS-6111010-SP	SCREW 11/64-40 L=9.5		ﾋﾗﾈｼﾞ 11/64-40 L=9.5	2
35		G5004-122-000	PLATE		ｲﾄﾞｳﾈｼﾞ ﾊｳﾐｲﾀ	1
36		PS-0160122-KH	SPRING PIN 1.6X12		ｽﾌﾟﾘﾝｸﾞﾋﾟﾝ 1.6X12	1
37		G5003-122-000	RAIL		ｷｮｳｷｭｳｿｳﾁｲﾄﾞｳﾚｰﾙ	1
38		G5005-122-000	NUT PLATE		ｲﾄﾞｳﾚｰﾙ ﾅｯﾄｲﾀ	1
39		SM-6067552-CP	SCREW M6 L=75		ﾛｯｶｸｱﾅﾎﾞﾙﾄ	2
40		G5368-100-000	DEVICE BASE		ｿｰﾁ ﾄﾘﾂｹﾄﾞﾀﾞｲ	1
41		G5001-122-000	DEVICE MOVING BASE		ｷｮｳｷｭｳｿｳﾁｲﾄﾞｳﾀﾞｲ	1
42		SS-7111410-SP	SCREW 11/64-40 L=14		ﾏﾙﾋﾗﾈｼﾞ 11/64-40 L=14	1
43		G5267-100-000	BELT-LOOP SUPPLY CAM LEVER		ﾊﾞﾝﾄﾞﾙｰﾌﾟ ｷｮｰｷｭｰｶﾑﾚﾊﾞｰ	1
44		G5280-100-000	BELT-LOOP SUPPLY CAM SHAFT		ﾊﾞﾝﾄﾞﾙｰﾌﾟ ｷｮｰｷｭｰｶﾑｺﾛｼﾞｸ	1
45		RE-0500000-KO	SNAP RING 5		Eｶﾞﾀﾄﾒﾜ 5	1
46		SS-8150810-SP	SCREW 15/64-28 L=8		ﾄﾒﾈｼﾞ 15/64-28 L=7.5	1
47		G5281-100-000	BELT-LOOP SUPPLY CAM BALL		ﾊﾞﾝﾄﾞﾙｰﾌﾟ ｷｮｰｷｭｰｶﾑﾀﾏ	1

Note (注記) #01 ..... For indicated meter — メートル表示用
#02 ..... For indicated inch — インチ表示用
#03 ..... For JIA — JIA用

17. JOINTED BELT-LOOP DETECT COMPONENTS
ベルトループ継ぎ目検出関係

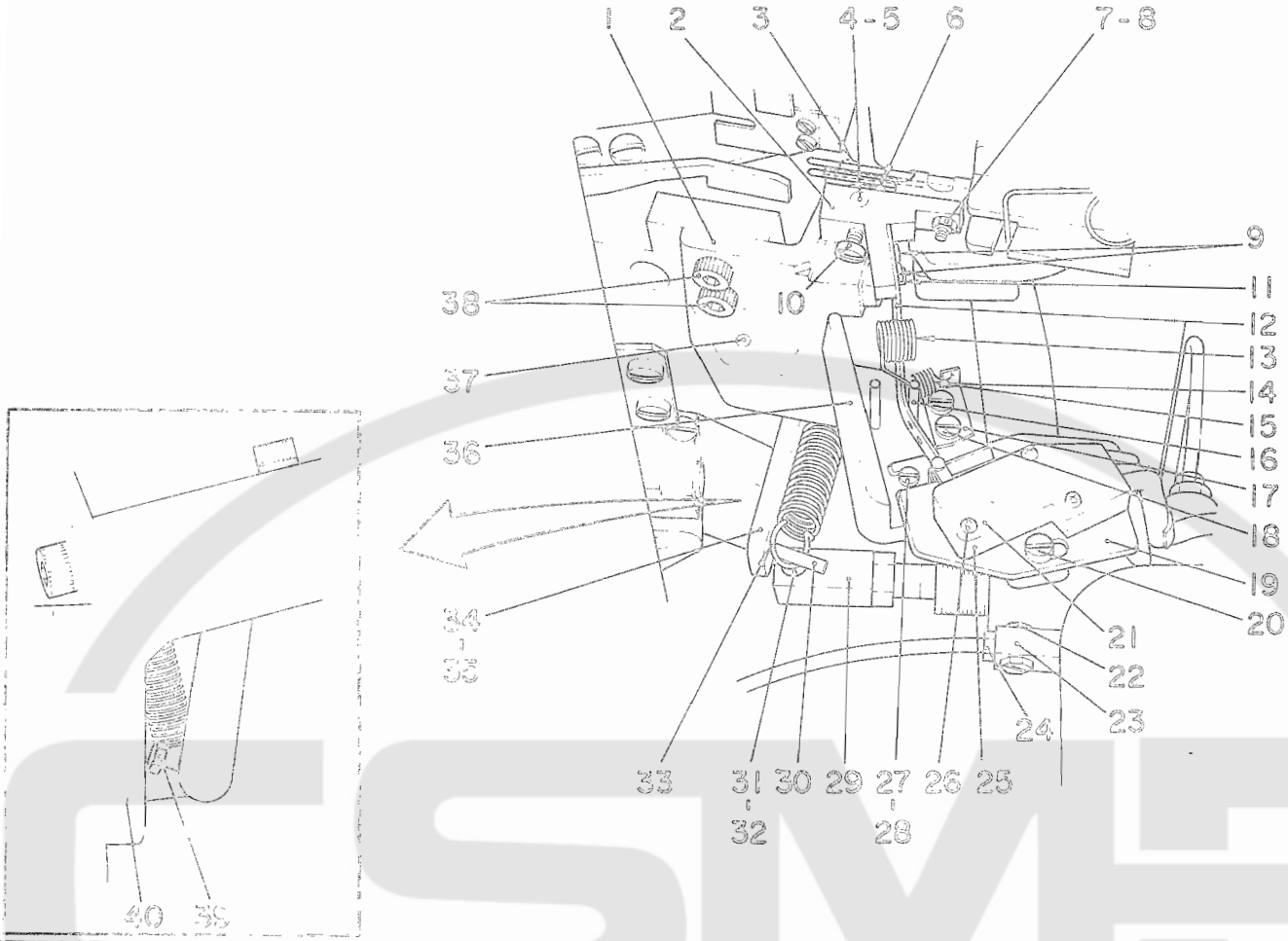

Ref. No.	Note 注記	Part No. 品番	Description	E. C. 変更年月	品名	Amt. Req. 数量
1		G5355-100-000	DETECTOR BASE		ﾂｷﾞﾒｹﾝｼｭﾂ ﾄﾞﾀﾞｲ	1
2		G5360-100-000	DETECTOR LEVER PLATE		ﾂｷﾞﾒｹﾝｼｭﾂ ﾚﾊﾞｰﾀﾞｲ	1
3		G5009-100-000	SCREW		ﾄﾒﾈｼﾞ	1
4		G5354-100-00A	SENSOR SHAFT BEARING		ﾂｷﾞﾒｹﾝｼｭﾂｼｬﾌﾄ ﾍﾞｱﾘﾝｸﾞ	2
5		G5354-100-00B	SENSOR SHAFT		ﾂｷﾞﾒｹﾝｼｭﾂﾒﾀﾙ ｼｬﾌﾄ	1
6		G5364-100-000	LOOP SENSOR REGULATING SPRING		ﾂｷﾞﾒｹﾝｼｭﾂｾｻｴ ﾁｮｰｾｲﾊﾞﾈ	1
7		G5009-100-000	SCREW		ﾄﾒﾈｼﾞ	1
8		N3-6090910-SP	NUT 9/64-40		ﾛｯｸﾅｯﾄ 9/64-40	1
9		SS-4080610-SP	SCREW 1/8-44 L=6.4		ﾅﾍﾞﾈｼﾞ 1/8-44 L=6.4	2
10		SS-7090920-SP	SCREW 9/64-40 L= 8.5		ﾏﾙﾋﾗﾈｼﾞ 9/64-40 L=8.5	1
11		G5009-100-000	SCREW		ﾄﾒﾈｼﾞ	1
12		G5363-100-000	DETECTOR LEVER		ﾂｷﾞﾒｹﾝｼｭﾂ ﾚﾊﾞｰ	1
13		G5364-100-000	DETECTOR LEVER PRESSER SPRING		ﾂｷﾞﾒｹﾝｼｭﾂ ﾚﾊﾞｰｵｻｴﾊﾞﾈ	1
14		G5366-100-000	DETECTOR LEVER SPRING		ﾂｷﾞﾒｹﾝｼｭﾂ ﾋｯﾊﾟﾘﾊﾞﾈ ｼﾞﾔｸ	1
15	#01	G5366-100-00A	DETECTOR LEVER SPRING		ﾂｷﾞﾒｹﾝｼｭﾂ ﾋｯﾊﾟﾘﾊﾞﾈ ｷｮｰ	1
16		G5367-100-000	DETECTOR LEVER PIN		ﾂｷﾞﾒｹﾝｼｭﾂ ﾚﾊﾞｰﾋﾟﾝ	2
17		G5361-100-000	LEVER SPRING BRACKET		ﾂｷﾞﾒｹﾝｼｭﾂ ﾚﾊﾞｰﾊﾞﾈｶｹﾞ	1
18		SS-7090710-SL	SCREW 9/64-40 L=6.8		ﾏﾙﾋﾗﾈｼﾞ 9/64-40 L=6.8	2
19		G5358-100-000	DETECTOR MOUNTING PLATE		ﾂｷﾞﾒｹﾝｼｭﾂ ｽｲｯﾁﾄﾘﾂｹｲﾀ	1
20		SS-4080610-SP	SCREW 1/8-44 L=6.4		ﾅﾍﾞﾈｼﾞ 1/8-44 L=6.4	2
21		G5356-100-000	DETECTOR COVER		ﾂｷﾞﾒｹﾝｼｭﾂ ｽｲｯﾁｶﾊﾞｰ	1
22		GHP-03525000	BUSHING PT 1/8-M5		ﾌﾞｯｼｭ PT1/8-M5	1
23		GHP-03524000	UNIVERSAL ELBOW M5		ｴﾙﾎﾞｰ M5	1
24		G5019-100-000	BARBED FITTING JOINT		ﾊﾞｰﾌﾞ ﾂｷﾞﾒﾁ	1
25		G5357-100-000	MICROSWITCH		ﾂｷﾞﾒｹﾝｼｭﾂ ｽｲｯﾁ	1
26		SM-4861601-SC	SCREW M2.6 L=16		ﾅﾍﾞﾈｼﾞ M2.6 L=16	2
27		G5366-100-000	DETECTOR BASE REGULATING PIN		ｽｲｯﾁﾄﾘﾂｹｲﾀ ﾁｮｰｾｲﾋﾟﾝ	2
28		G5375-100-000	PUSH NUT		ﾌﾟｯｼｭ ﾅｯﾄ	2
29		G5374-100-00B	UPPER KNIFE CYLINDER BRACKET		ｳｴﾉｷﾅ ﾒｽｼﾘﾝﾀﾞｰｻｷｶﾞﾈ	1
30		PS-0300201-KP	SPRING PIN 3.0X20		ｽﾌﾟﾘﾝｸﾞﾋﾟﾝ 3.0X20	1
31		G5375-100-00A	UPPER KNIFE LEVER PIN		ﾋﾟﾝ	1
32		KR-0300000-K0	SNAP RING 3		Eｶﾞﾀﾄﾒﾜ 3	1
33		G5367-100-000	LOOP FEEDING ROLLER SPRING		ｵｸﾘﾀﾞｼ ﾛｰﾗｰﾋｷﾊﾞﾈ	1
34		G5706-100-000	SPRING L-HEAD RACK		ﾊﾞﾈｶｹﾞ ｸｶﾞﾀｲﾀ	1
35		SH-0057002-TP	SCREW M5X0.8 L=16		ﾛｯｸｶﾞｱﾅﾎﾞﾙﾄ M5X0.8 L=16	2
36		G5359-100-000	DETECTOR BASE		ﾂｷﾞﾒｹﾝｼｭﾂ ｽｲｯﾁﾄﾞﾀﾞｲ	1
37		SH-7052002-TP	SCREW M5 L=20		ﾛｯｸｶﾞｱﾅﾎﾞﾙﾄ M5X0.8 L=20	2
38		SH-6051202-TP	SCREW M5X0.8 L=12		ﾛｯｸｶﾞｱﾅﾎﾞﾙﾄ M5X0.8 L=12	2
39		SS-4080710-000	SCREW 11/64-40 L=8		ﾄﾒﾈｼﾞ	1
40		G5365-100-000	LOOP FEEDING L-HEAD BASE		ﾙｰﾌﾟ ｵｸﾘﾀﾞｼﾄﾞﾀﾞｲ ﾄﾘﾂｹ L	1

Note (注記) #01 ..... Special order part　　特別注文部品

18. CONTROL BOX COMPONENTS
制御ボックス関係

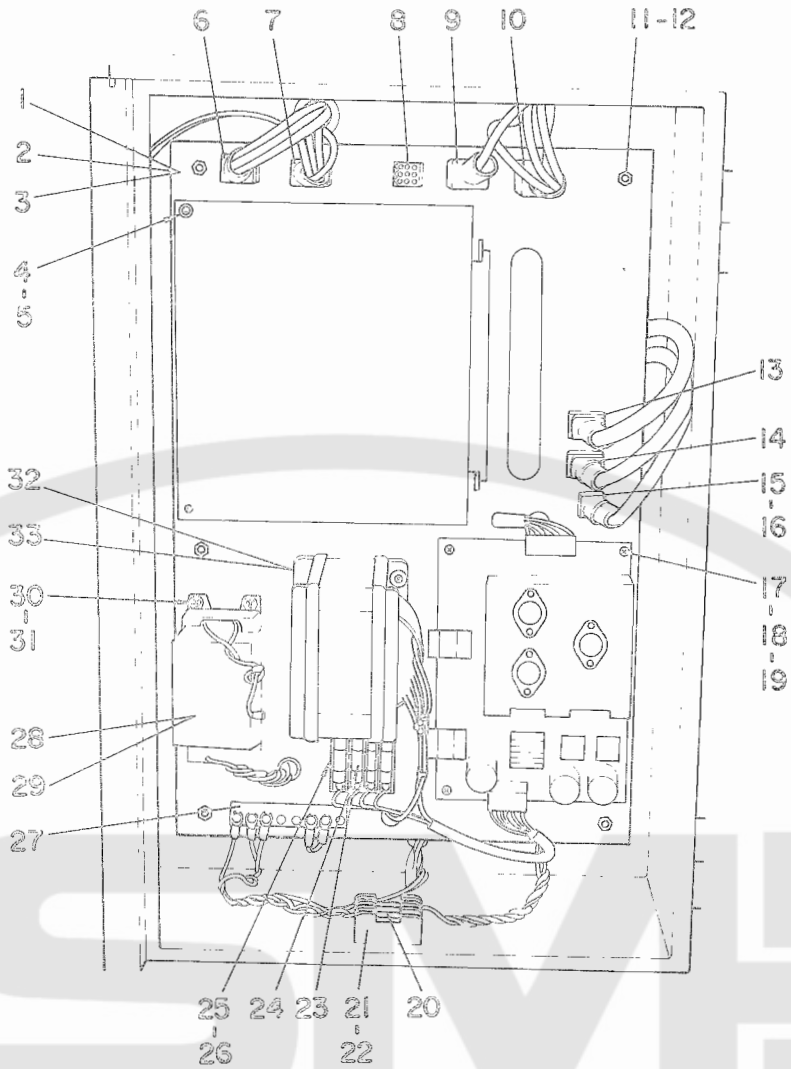

Ref. No.	Note 注記	Part No. 品番	Description	E. C. 変更年月	品名	Amt. Req 数量
1	#01	G6001-122-0A0	CONTROL BASE ASM.		ﾎﾞｰﾄﾞｰﾌﾞ ｼﾞﾂｿｳ	1
2	#02	G6001-122-0A0	CONTROL BASE ASM.		ｾｲｷﾞｮﾊﾞﾝ ｸﾐ	1
3	#03	G6001-122-0A0	CONTROL BASE ASM.		ｾｲｷﾞｮﾎﾞｯｸｽ ｸﾐ C	1
4		SM-4030501-SC	SCREW M3X0.5 L=5		ﾅﾍﾞｺﾈｼﾞ M3X0.5 L=5	2
5		WP-0320501-SC	WASHER 3.2X7X0.5		ﾋﾗｻﾞｶﾞﾈ 3.2X7X0.5	2
6		HK-0186200-9B	9-POLE RECEPTACLE, RED		ﾚｾﾌﾟﾀｸﾙ 9P	1
7		HK-0186201-2B	12-POLE RECEPTACLE, RED		ﾘｾﾌﾟﾀｸﾙ 12P	1
8		D6023-555-B0B	9-POLE RECEPTACLE, WHITE		9ｷｮｸ ﾅｲﾛﾝ ﾚｾﾌﾟﾀｸﾙ(ｼﾛ)	1
9		D8604-761-C0B	9P RECEPTACLE (BLUE)		9P ﾚｾﾌﾟﾀｸﾙ (ｱｵ)	1
10		GBC-02620000	12-POLE RECEPTACLE, BLUE		ﾅｲﾛﾝ ﾚｾﾌﾟﾀｸﾙ ｱｵ 12ｷｮｸ	1
11		G5751-100-000	POST		ﾎﾟｽﾄ	6
12		NM-6060001-SC	NUT M6		ﾛｯｸｶｸﾅｯﾄ M6 ﾆｽﾞ	6
13		GBC-02618000	12P RECEPTACLE		ﾅｲﾛﾝ ﾚｾﾌﾟﾀｸﾙ ｼﾛ 12P	1
14		HK-0186201-2C	12-POLE RECEPTACLE, YELLOW		ﾘｾﾌﾟﾀｸﾙ 12P	1
15		D6029-555-B0A	NYLON PLUG 6P		6P ﾅｲﾛﾝﾌﾟﾗｸﾞ	1
16		G6101-122-0A0	CN1 CONNECTOR CABLE ASM.		CN1 ｹｰﾌﾞﾙ ｸﾐ	1
17		SM-4031601-SC	SCREW M3 L=16		ﾅﾍﾞｺﾈｼﾞ M3 L=16	4
18		WP-0320501-SC	WASHER 3.2X7X0.5		ﾋﾗｻﾞｶﾞﾈ 3.2X7X0.5	4
19		WS-0310002-KN	SPRING WASHER 3.1X5.9X0.7		ﾊﾞﾈｻﾞｶﾞﾈ 3.1X5.9X0.7	4
20		D6110-555-B00	FUSE 5A		ﾋｭｰｽﾞ 5A	3
21		GBC-02611000	FUSE HOLDER		ﾋｭｰｽﾞ ﾎﾙﾀﾞｰ	1
22		G5009-100-000	SCREW		ﾄﾒﾈｼﾞ	2
23		MAT-80143T00	FUSE, 3A		ﾋｭｰｽﾞ 3A	3
24		G5024-110-000	FUSE 4A		ｶﾞﾗｽｶﾝ ﾋｭｰｽﾞ (4A)	1
25		G5436-100-000	FUSE HOLDER		ﾋｭｰｽﾞﾎﾙﾀﾞｰ A	1
26		G5009-100-000	SCREW		ﾄﾒﾈｼﾞ	2
27		G5754-100-00A	ELECTRIC UNIT		ﾀﾝｼﾀﾞｲ 12P	1
28	#02	G5775-100-000	NOISE FILTER		ﾉｲｽﾞﾌｨﾙﾀ B	1
29	#01	MAT-81151T00	NOISE FILTER		ﾉｲｽﾞ ﾌｨﾙﾀｰ	1
30		SM-4030601-SN	SCREW M3X0.5 L=6		ﾅﾍﾞｺﾈｼﾞ M3X0.5 L=6	4
31		WP-0320501-SC	WASHER 3.2X7X0.5		ﾋﾗｻﾞｶﾞﾈ 3.2X7X0.5	4
32	#01	G6004-122-00A	TRANSFORMER A		ﾃﾞﾝｹﾞﾝﾄﾗﾝｽ A	1
33	#02	G6004-122-00B	TRANSFORMER B		ﾃﾞﾝｹﾞﾝﾄﾗﾝｽ B	1

Note (注記) #01 ..... For 100 ~ 240V　100～240V用
#02 ..... For 200 ~ 440V　200～440V用
#03 ..... For Eastern Europe　東欧用

19. TABLE COMPONENTS
テーブル関係

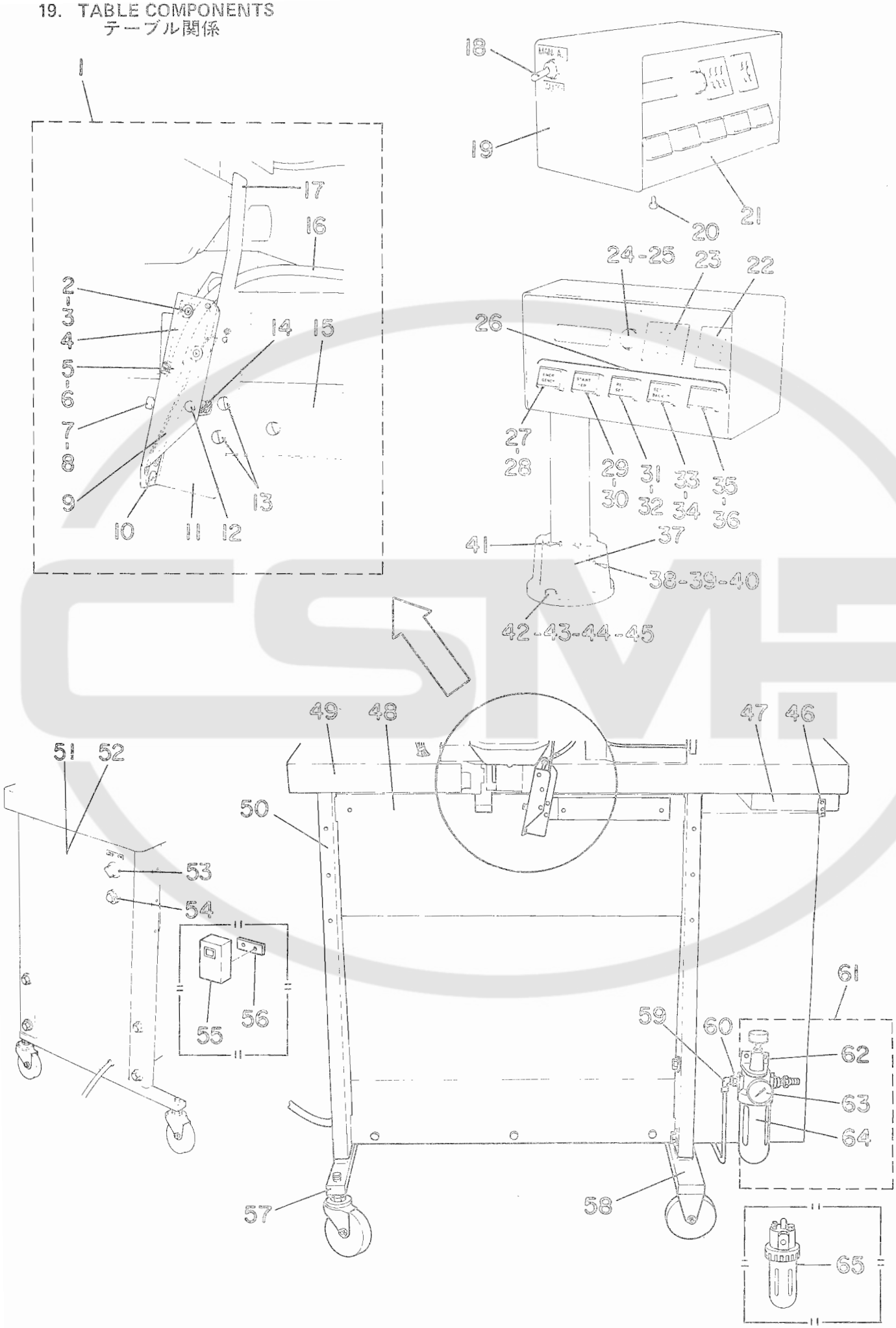

Ref. No.	Note 注記	Part No. 品番	Description	E. C. 変更年月	品名	Amt. Req. 数量
1		G5416-100-0A0	STARTING SWITCH ASM.		ｽﾀｰﾄｽｲｯﾁ ｸﾐ	1
2		SM-6861601-SC	SCREW M2.6 L=16		ﾅﾍﾞｺﾈｼﾞ M2.6 L=16	(2)
3		G5089-100-000	MICROSWITCH NUT PLATE		ﾏｲｸﾛｽｲｯﾁ ﾅｯﾄｲﾀ	(1)
4		G5061-100-000	MICROSWITCH		ﾏｲｸﾛｽｲｯﾁ ｽﾗｲﾄﾞｽｲｯﾁ	(1)
5		MX-0002300-00	CLAMP		ﾅｲﾛﾝｸﾗﾝﾌﾟ	(1)
6		SS-7090510-SL	SCREW 9/64-40 L=4.6		ﾏﾙﾋﾗﾈｼﾞ 9/64-40 L=4.6	(1)
7		SS-9111510-SP	SCREW 11/64-40 L=15		ﾛｯｶｸﾎﾞﾙﾄ 11/64-40 L=15	(1)
8		NS-6110350-SP	NUT 11/64-40		ﾛｯｶｸﾅｯﾄ 11/64-40	(1)
9		G5420-100-000	SPRING PLATE		ｽｲｯﾁ ﾓﾄﾞｼﾊﾞﾈ	(1)
10		SS-7090510-SL	SCREW 9/64-40 L=4.6		ﾏﾙﾋﾗﾈｼﾞ 9/64-40 L=4.6	(2)
11		G5417-100-000	SWITCH INSTALLING PLATE		ｽｲｯﾁ ﾄﾘﾂｹｲﾀ	(1)
12		G5421-100-000	PIVOT PIN		ｽｲｯﾁ ｼﾃﾝﾋﾟﾝ	(1)
13		SS-6111010-SP	SCREW 11/64-40 L= 9.5		ﾋﾗﾈｼﾞ 11/64-40 L=9.5	(2)
14		SS-7090510-SL	SCREW 9/64-40 L=4.6		ﾏﾙﾋﾗﾈｼﾞ 9/64-40 L=4.6	(2)
15		G5418-122-000	SWITCH BASE		ｽｲｯﾁ ﾄﾞﾀﾞｲ	(1)
16		G5400-100-0A0	SWITCH CORD ASM.		ﾃﾓﾄｽｲｯﾁ ｺｰﾄﾞ ｸﾐ	(1)
17		G5419-100-000	SWITCH PRESSER PLATE		ｽｲｯﾁ ｵｼｲﾀ	(1)
18		G5552-500-000	MANUAL/AUTO SWITCH		ｼｽﾄﾞｰ ｷﾘｶｴｽｲｯﾁ	1
19		G5201-122-000	SWITCH BOX		ｽｲｯﾁﾎﾞｯｸｽ	1
20		SS-7090770-SL	SCREW 9/64-40 L=6.8		ﾏﾙﾋﾗﾈｼﾞ 9/64-40 L=6.8	3
21		G5202-122-000	SWITCH PANEL		ｽｲｯﾁﾊﾟﾈﾙ	1
22		MA-0009500-00	DIGITAL SWITCH		ｽｲｯﾁ	2
23		MA-0009500-00	DIGITAL SWITCH		ｽｲｯﾁ	4
24		MA-0009100-10	PUSH-BUTTON SWITCH		ｽｲｯﾁ	1
25		G6069-122-000	SCREEN, BLUE		ｽｸﾘｰﾝ ｱｵ	1
26		MA-0009200-10	PUSH-BUTTON SWITCH		ｽｲｯﾁ	5
27		G6070-122-000	SCREEN, RED		ｽｸﾘｰﾝ ｱｶ	1
28		G6071-122-000	SEAL "EMERGENCY"		ｼｰﾙ "EMERGENCY"	1
29		G6062-122-000	SCREEN, GREEN		ｽｸﾘｰﾝ (ﾐﾄﾞﾘ)	1
30		G6065-122-000	SEAL "STARTER"		ｼｰﾙ "STARTER"	1
31		G6064-122-000	SCREEN, BLUE		ｽｸﾘｰﾝ (ｱｵ)	1
32		G6068-122-000	SEAL "RESET"		ｼｰﾙ "RESET"	1
33		G6063-122-000	SCREEN, TRANSPARENCY		ｽｸﾘｰﾝ (ﾄｳﾒｲ)	1
34		G6066-122-000	SEAL "SET/BACK"		ｼｰﾙ "SET/BACK"	1
35		G6061-122-000	SCREEN, YELLOW		ｽｸﾘｰﾝ (ｷ)	1
36		G6067-122-000	SEAL " "		ｼｰﾙ " "	1
37		G5203-122-0A0	SWITCH BOX BASE ASM.		ｽｲｯﾁﾎﾞｯｸｽ ﾄﾞﾀﾞｲ	1
38		SM-6063012-CP	SCREW M6 L=30		ﾛｯｶｸｱﾅﾎﾞﾙﾄ M6 L=30	2
39		WS-0631510-KP	SPRING WASHER		ﾊﾞﾈｻﾞｶﾞﾈ	2
40		NM-6060001-SC	NUT M6		ﾛｯｶｸﾅｯﾄ M6 1ｼｭ	4
41		PS-0400182-K0	SPRING PIN 4.0X18		ｽﾌﾟﾘﾝｸﾞﾋﾟﾝ 4.0X18	2
42		SM-6088502-TP	SCREW M8 L=85		ﾛｯｶｸｱﾅﾎﾞﾙﾄ M8 L=85	2
43		WP-0851846-SC	WASHER 8.5X22.0X1.8		ﾋﾗｻﾞｶﾞﾈ 8.5X22X1.8	2
44		WS-0822010-KP	SPRING WASHER 8.2X15X2		ﾊﾞﾈｻﾞｶﾞﾈ 8.2X15X2	2
45		NM-6080001-SC	NUT M8X1.25		ﾛｯｶｸﾅｯﾄ M8 1ｼｭ	2
46		G5107-122-000	DRAWER STOPPER		ﾋｷﾀﾞｼ ｽﾄｯﾊﾟ	1
47		G5106-122-0A0	DRAWER ASM.		ﾋｷﾀﾞｼ	1
48		G5103-122-000	STAND PLATE, FRONT		ﾀﾞｲｱｼ ｺｼｲﾀﾏｴ	1
49		G5101-122-000	TABLE		ﾃｰﾌﾞﾙ	1
50		G5102-122-0A0	MACHINE STAND ASM.		ｷｮｳｾｲｼｷ ﾀﾞｲｱｼ	1
51		G5102-122-000	STAND PLATE, LEFT		ﾀﾞｲｱｼｺｼｲﾀﾖｺ	1
52	#01	G5102-122-00A	STAND PLATE, LEFT		ﾀﾞｲｱｼｺｼｲﾀﾖｺ	1
53		G5453-100-000	MAIN SWITCH		ﾒｲﾝ ｽｲｯﾁ	1
54		G5454-100-00A	PILOT LAMP		ﾊﾟｲﾛｯﾄﾗﾝﾌﾟ	1
55	#01	MA-0000700-00	POWER SWITCH ASM.		ﾏｲｸﾛｽｲｯﾁ	1
56	#01	G6169-122-000	MAIN SWITCH INSTALLING PLATE		ﾃﾞﾝｹﾞﾝSW ﾄﾘﾂｹｲﾀ	1
57		G5105-122-0A0	STAND ASM., LEFT		ｱｼ (ｼﾞｻﾞｲ)	1
58		G5104-122-0A0	STAND ASM., RIGHT		ｱｼ (ｺﾃｲ)	1
59		G5707-500-000	ELBOW		ｴﾙﾎﾞｳｴﾙﾎﾞ	1
60		G5535-100-000	BUSHING		ﾌﾞｯｼｭ	1
61		PF-0252010-A0	AIR FILTER REGULATOR ASM.		ﾌｲﾙﾀ ﾚｷﾞｭﾚﾀ ｸﾐ	1
62		PF-9010010-00	BRACKET		ﾌﾞﾗｹｯﾄ	(1)
63		PF-0652020-00	AIR GAUGE		ｴｱｰｹﾞｰｼﾞ	(1)
64		PF-0252010-00	AIR FILTER REGULATOR		ﾌｲﾙﾀ ﾚｷﾞｭﾚﾀ	(1)
65	#02	PF-0353010-00	LUBRICATOR		ﾙﾌﾞﾘｹｰﾀ	1

Note (注記) #01 ..... For Eastern Europe 東欧用
#02 ..... For JIA JIA用

20. SOLENOID VALVE COMPONENTS
電磁弁関係

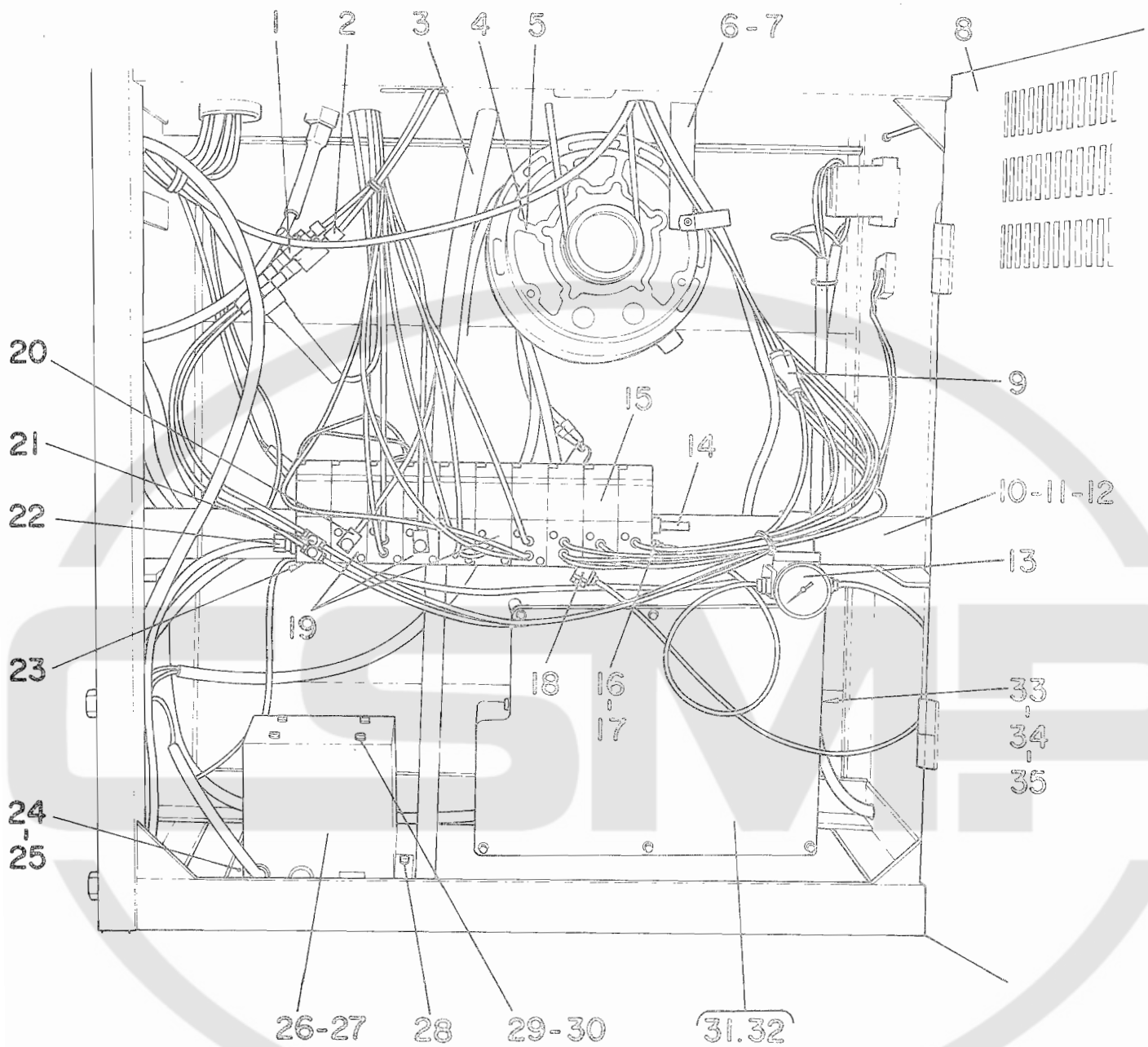

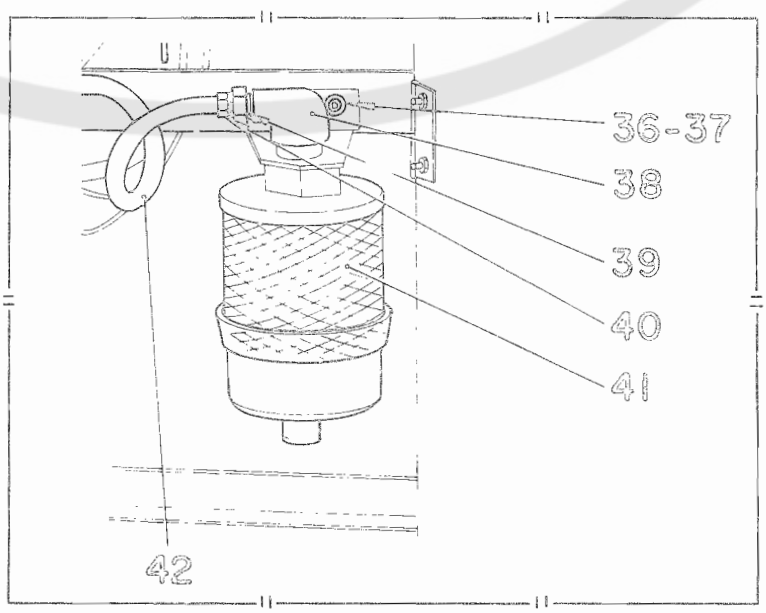

Ref. No.	Note 注記	Part No. 品番	Description	E. C. 変更年月	品名	Amt. Req. 数量
1		PC-0105020-00	SPEED CONTROLLER		ｽﾋﾟｰﾄﾞ ｺﾝﾄﾛｰﾗ	2
2		PJ-3010405-01	QUICK COUPLING		ﾜﾝﾀｯﾁﾂｷﾞﾃ	4
3		B9103-771-000	OIL DRAIN TUBE		ﾊｲﾕ ﾊﾟｲﾌﾟ	1
4	#01	MTS-NJ5000AS	MOTOR ASM.		ﾓｰﾀ (ﾀﾝｿｳ)	1
5	#02	MTS-NJ5000AT	MOTOR ASM.		ﾓｰﾀ (ｻﾝｿｳ)	1
6		G5521-100-000	SPEED CONTROLLER PLATE		ｽﾋﾟｰﾄﾞｺﾝﾄﾛｰﾗ ﾄﾘﾂｹｲﾀ	1
7		SK-3312000-S0	WOOD SCREW D=3.1 L=20		ﾓｸﾈｼﾞ D=3.1 L=20	2
8		G5111-122-000	STAND REAR COVER		ﾀﾞｲｱｼ ｳｼﾛﾄﾋﾞﾗｲﾀ	1
9		PJ-3080400-01	QUICK COUPLING		ﾜﾝﾀｯﾁﾂｷﾞﾃ	15
10		G5110-122-000	SOLENOID VALVE BASE PLATE		ﾊﾞﾙﾌﾞ ﾄﾘﾂｹｲﾀ	1
11		SM-6061002-TP	SCREW M6 L=10		ﾛｯｶｸｱﾅﾎﾞﾙﾄ M6 L=10	2
12		WP-0651001-SB	WASHER		ﾋﾗｻﾞｶﾞﾈ ﾐｶﾞｷﾏﾙ M6	2
13		PF-0252020-A0	AIR REGULATOR ASM.		ｴｱｰﾚｷﾞｭﾚﾀ ｸﾐ	1
14		G5522-100-000	HOSE NIPPLE		ﾎｰｽﾆｯﾌﾟﾙ	1
15		PV-1505020-A0	5-WAY SOLENOID VALVE ASM.		ｺﾞﾎｳﾚﾝｼﾞﾍﾞﾝ	7
16		GHP-03525000	BUSHING PT 1/8-M5		ﾌﾞｯｼｭ PT1/8-M5	3
17		G5019-100-000	BARBED FITTING JOINT		ﾊﾞｰﾌﾞ ﾂｷﾞﾃ	23
18		GHP-03524000	UNIVERSAL ELBOW M5		ｴﾙﾎﾞ M5	1
19		PV-1305010-A0	3-WAY SOLENOID VALVE ASM.		ｻﾝﾎﾟｳﾚﾝｼﾞﾍﾞﾝ	3
20		PC-0105010-00	SPEED CONTROLLER		ｽﾋﾟｰﾄｺﾝﾄﾛｰﾗ	2
21		G5196-100-000	JOINT		ﾜﾝﾀｯﾁ ﾂｷﾞﾃ	2
22		GHP-03520000	MALE CONNECTOR (1/4-1/8)		ｵｽｺﾈｸﾀｰ (1/4-1/8)	1
23		G5525-100-000	SOLENOID VALVE PLATE		ﾃﾞﾝｼﾞﾍﾞﾝｲﾀ	1
24		G5109-122-000	TRANSFORMER INSTALLING PLATE		ｲﾄﾏｷﾖｳﾄﾗﾝｽﾄﾘﾂｹｲﾀ	1
25		SM-6061002-TP	SCREW M6 L=10		ﾛｯｶｸｱﾅﾎﾞﾙﾄ M6 L=10	2
26		G3201-122-000	TRANSFORMER BOX		ｲﾄﾏｷ ﾄﾗﾝｽﾎﾞｯｸｽ	1
27		G3202-122-000	TRANSFORMER		ｲﾄﾏｷ ﾄﾗﾝｽ	1
28		SM-6051002-SP	SCREW M5 L=10		ﾛｯｶｸｱﾅﾎﾞﾙﾄ M5X0.8 L=10	4
29		G3203-122-000	NUT PLATE		ﾄﾗﾝｽ ﾄﾘﾂｹﾅｯﾄｲﾀ	2
30		SM-6051002-SP	SCREW M5 L=10		ﾛｯｶｸｱﾅﾎﾞﾙﾄ M5X0.8 L=10	4
31		MTS-NJ500001	MOTOR CONTROLLER ASM.		ﾓｰﾀ ｺﾝﾄﾛｰﾗ	1
32		MTS-NJ500002	MOTOR CIRCUIT BOARD ASM.		ﾓｰﾀ ｷﾊﾞﾝ	1
33		G5108-122-000	MOTOR BOX INSTALLING PLATE		ﾓｰﾀﾎﾞｯｸｽ ﾄﾘﾂｹ L	1
34		SM-6051002-SP	SCREW M5 L=10		ﾛｯｶｸｱﾅﾎﾞﾙﾄ M5X0.8 L=10	4
35		SM-6061002-TP	SCREW M6 L=10		ﾛｯｶｸｱﾅﾎﾞﾙﾄ M6 L=10	2
36	#03	SM-6061002-TP	SCREW M6 L=10		ﾛｯｶｸｱﾅﾎﾞﾙﾄ M6 L=10	2
37	#03	WP-0651001-SB	WASHER		ﾋﾗｻﾞｶﾞﾈ ﾐｶﾞｷﾏﾙ M6	2
38	#03	G5534-100-000	ELBOW		ｲｹｲ ｴﾙﾎﾞ	1
39	#03	G5535-100-000	BUSHING		ﾌﾞｯｼｭ	1
40	#03	G5522-100-000	HOSE NIPPLE		ﾎｰｽﾆｯﾌﾟﾙ	1
41	#03	G5533-100-000	EXHAUST AIR FILTER		ﾊｲｷ ﾌｨﾙﾀｰ	1
42	#03	G5524-100-000	HOSE		ｺﾞﾑﾎｰｽ	0.3

Note (注記) #01 ..... For 1-phase 単相用
#02 ..... For 3-phase 3相用
#03 ..... For JIA JIA用

21. PRINTED CIRCUIT BOARD COMPONENTS (1)
基板関係(1)

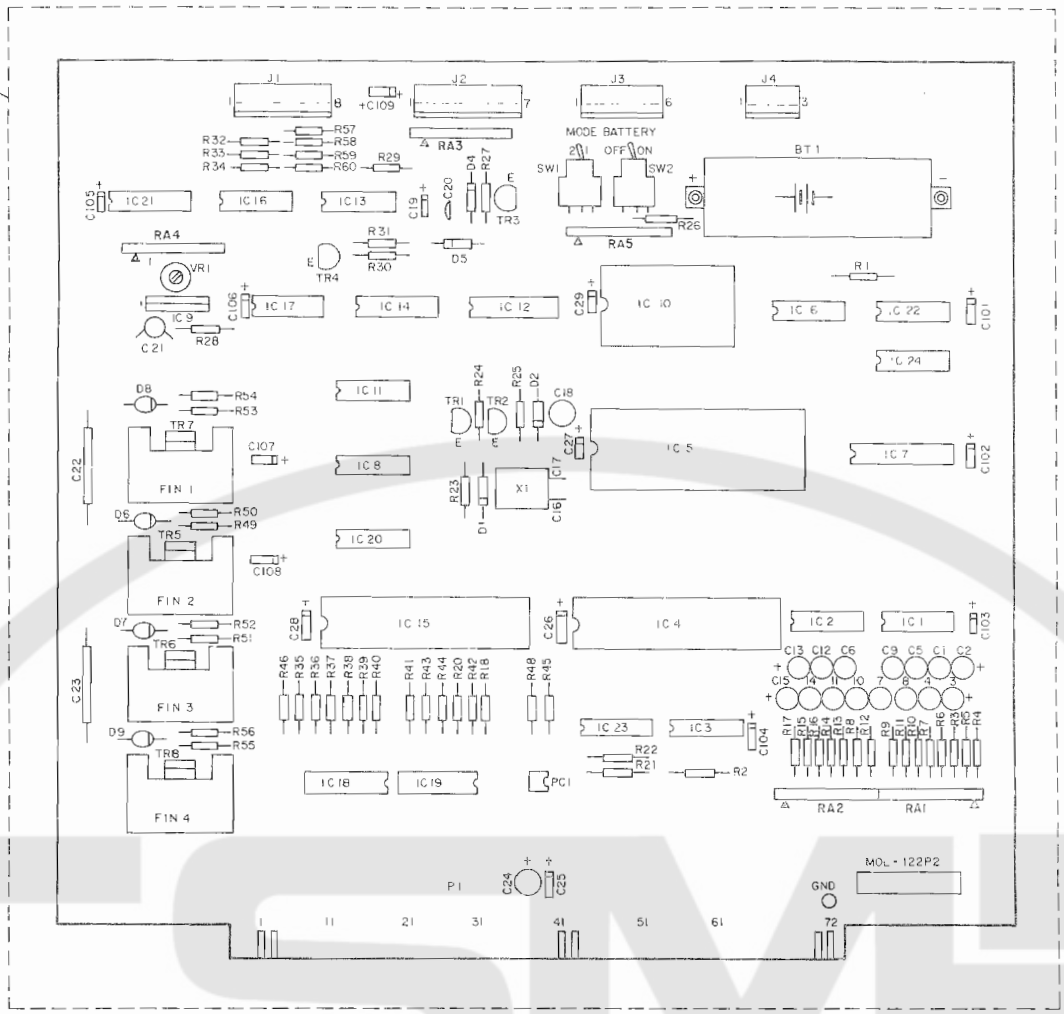

TABLE OF CODE & REF. NO.
記号、Ref. No. 表

Code 記号	Ref. No.	Code 記号	Ref. No.
IC1, IC2, IC3	2	D6 ~ D9	29
IC4, IC15	3	C1 ~ C15	30
IC5	4	C16, C17	31
IC6, IC21	5	C18	32
IC7	6	C19, C25 ~ C29, C101 ~ C109	33
IC8	7	C20	34
IC9	8	C21	35
IC10	9	C22, C23	36
IC11	10	C24	37
IC12	11	RA1 ~ RA5	38
IC13	12	VR1	39
IC14	13	R1 ~ R17, R23, R28	40
IC16	14	R18, R20, R24, R29, R31	41
IC17, IC23	15	R35 ~ R44, R46, R48	
IC18, IC19	16	R21, R32, R33, R34	42
IC20	17	R22	43
IC22	18	R25, R57 ~ R60	44
IC24	19	R26	45
X1	20	R27	46
BT1	21	R30	47
PC1	22	R45, R49, R51, R53, R55	48
SW1, SW2	23	R50, R52, R54, R56	49
TR1, TR2	24	FIN1 ~ FIN4	50
TR3, TR4	25	J1	51
TR5 ~ TR8	26	J2	52
D1, D4, D5	27	J3	53
D2	28	J4	54
		IC10 (For JIA)	55

Ref. No.	Note 注記	Part No. 品番	Description	E. C. 変更年月	品名	Amt. Req. 数量
1		36002-1122-0A0	CONTROL CIRCUIT BOARD ASM.		ｼﾞﾂｿｳｽﾞ ﾌﾟﾘﾝﾄﾋﾖｳ	1
2		NL-0012800-00	IC (SN74LS14N)		IC (SN74LS14N)	(3)
3		NL-0034900-00	IC (M5L8155P)		IC (8155)	(2)
4		NL-0034000-00	IC (M5L8085AP)		IC (8085A)	(1)
5		NL-0021600-00	IC (SN74LS138N)		IC (SN74LS138N)	(2)
6		NL-0013600-00	IC (M74LS373P)		IC (SN74LS373N)	(1)
7		NL-0014600-00	IC SN74LS 293N		IC (SN74LS293N)	(1)
8		NL-0025700-00	IC (M51201)		IC (M51201L)	(1)
9		NL-0023800-74	EPROM (MT564Y)		IC (2732)	(1)
10		NL-0013600-00	IC SN74LS 74N		IC (SN74LS74N)	(1)
11		NL-0062400-00	RAM (MSM5114-3RS)		IC	(1)
12		NL-0062600-00	IC (TC40N010P)		IC	(1)
13		NL-0032700-00	IC (M74LS365AP)		IC (74LS365N)	(1)
14		NL-0036200-00	IC (MS74069)		IC (TC4069UBP)	(1)
15		NL-0031300-00	IC (M53238P)		IC (M53238)	(2)
16		NT-0024400-00	TRANSISTOR (M54524P)		ﾄﾗﾝｼﾞｽﾀ	(2)
17		NL-0000500-00	IC SN7406N		IC (SN7406N)	(1)
18		NL-0012200-00	IC SN74LS 00N		IC (SN74LS00N)	(1)
19		NL-0012300-00	IC SN74LS 08N		IC (SN74LS08N)	(1)
20		NX-0000500-00	QUARTZ CRYSTAL 3.58MHZ		ｾﾗﾐｯｸ ﾊﾞｲﾌﾞﾚｰｼｮﾝ 3.58MHZ	(1)
21		NX-0011900-00	BATTERY (G250-3F)		ﾆｯｶﾄﾞﾃﾞﾝﾁ	(1)
22		NL-0062300-00	IC (PC317)		IC	(1)
23		NA-0001900-00	TOGGLE SWITCH 0.4VA		ｽｲｯﾁ	(2)
24		NT-0002400-00	TRANSISTOR 2SC711-E		ﾄﾗﾝｼﾞｽﾀ (2SC711-E)	(2)
25		NT-0027200-00	TRANSISTOR (2SA628)		ﾄﾗﾝｼﾞｽﾀ	(2)
26		NT-0014300-00	TRANSISTOR (2SD799)		ﾄﾗﾝｼﾞｽﾀ	(4)
27		NG-0001400-00	DIODE (MZ304)		ﾀﾞｲｵｰﾄﾞ	(3)
28		NG-0015900-00	DIODE (1S2473)		ﾀﾞｲｵｰﾄﾞ (1S2473)	(1)
29		NG-0027300-00	DIODE (3GH61)		ﾀﾞｲｵｰﾄﾞ	(4)
30		NC-0012200-00	CAPACITOR 1MF 35V		ｺﾝﾃﾞﾝｻ 1MF 35V ﾃﾞﾝｶｲ	(15)
31		NF-0015600-00	CAPACITOR 10PF 12V		ｺﾝﾃﾞﾝｻ 10PF 50V ｾﾗﾐｯｸ	(2)
32		NC-0011400-00	CAPACITOR 10MF 25V		ｺﾝﾃﾞﾝｻ 10MF 25WV ﾃﾞﾝｶｲ	(1)
33		NC-0010653-00	CAPACITOR 3.3MF 10V		ｺﾝﾃﾞﾝｻ 1000PF	(15)
34		NC-0301131	CAPACITOR 0.01MF 25V		ｺﾝﾃﾞﾝｻ 0.01MF 25V SC	(1)
35		NC-0001300-00	CAPACITOR 2.2MF 16V		ｺﾝﾃﾞﾝｻ 2.2MF 16V ﾀﾝﾀﾙ	(1)
36		NC-0011100-00	CAPACITOR 0.22MF 250V		ｺﾝﾃﾞﾝｻ 0.22MF 250V ﾌｨﾙﾑ	(2)
37		NC-0012100-00	CAPACITOR 100MF 16V		ｺﾝﾃﾞﾝｻ	(1)
38		NR-0019933-20	RESISTOR ARRAY		ﾃｲｺｳｱﾚｲ	(5)
39		EV-0051005-000	VARIABLE RESISTOR 10K OHM 1/2W		ﾎﾞﾘｭｰﾑ 10Kｵｰﾑ 1/2W	(1)
40		NR-0017010-10	RESISTOR 100 OHM 1/4W		ﾃｲｺｰｷ 100ｵｰﾑ 1/4 ﾀﾝｿﾋﾏｸ	(19)
41		NR-0017010-20	RESISTOR 1 KILO OHM 1/4W		ﾃｲｺｰｷ 1K 1/4W ﾀﾝｿﾋﾏｸ	(17)
42		NR-0017047-10	RESISTOR 470 OHM 1/4W		ﾃｲｺｰｷ 470ｵｰﾑ 1/4Wﾀﾝｿﾋﾏｸ	(4)
43		NR-0017082-10	RESISTOR 820 OHM 1/4W		ﾃｲｺｰｷ 820ｵｰﾑ 1/4W	(1)
44		NR-0017010-30	RESISTOR 10 KILO OHM 1/4W		ﾃｲｺｰｷ 10K 1/4W ﾀﾝｿﾋﾏｸ	(5)
45		NR-0017015-20	RESISTOR 15K 1/4W		ﾃｲｺｰｷ 1.5K 1/4W ﾀﾝｿﾋﾏｸ	(1)
46		NR-0017033-10	RESISTOR 330 OHM 1/4W		ﾃｲｺｰｷ 330ｵｰﾑ 5% 1/4W	(1)
47		NR-0017010-40	CARBON FILM RESISTOR 100K		ﾃｲｺｰｷ 100K 1/4W ﾀﾝｿﾋﾏｸ	(1)
48		NR-0017027-10	RESISTOR 270 OHM		ﾃｲｺｰｷ 270ｵｰﾑ 1/4W ﾀﾝｿ	(5)
49		NR-0017022-20	RESISTOR 2.2 KILO OHM 1/4W		ﾃｲｺｰｷ 2.2K 1/4W ﾀﾝｿﾋﾏｸ	(4)
50		NU-0217900	RADIATOR		ﾎｰﾈﾂﾊﾟﾝ	(4)
51		NK-0211000-80	8-POLE CONNECTOR		ｺﾈｸﾀ	(1)
52		NK-0211000-70	7-POLE CONNECTOR		ｺﾈｸﾀ	(1)
53		NK-0211000-60	6-POLE CONNECTOR		ｺﾈｸﾀ	(1)
54		NK-0211000-30	3-POLE CONNECTOR		ｺﾈｸﾀ	(1)
55	#01	NL-0023800-75	EPROM (MT564Y)		IC (2732)	(1)

Note (注記) #01 ..... For JIA　　JIA用

22. PRINTED CIRCUIT BOARD COMPONENTS (2)
基板関係(2)

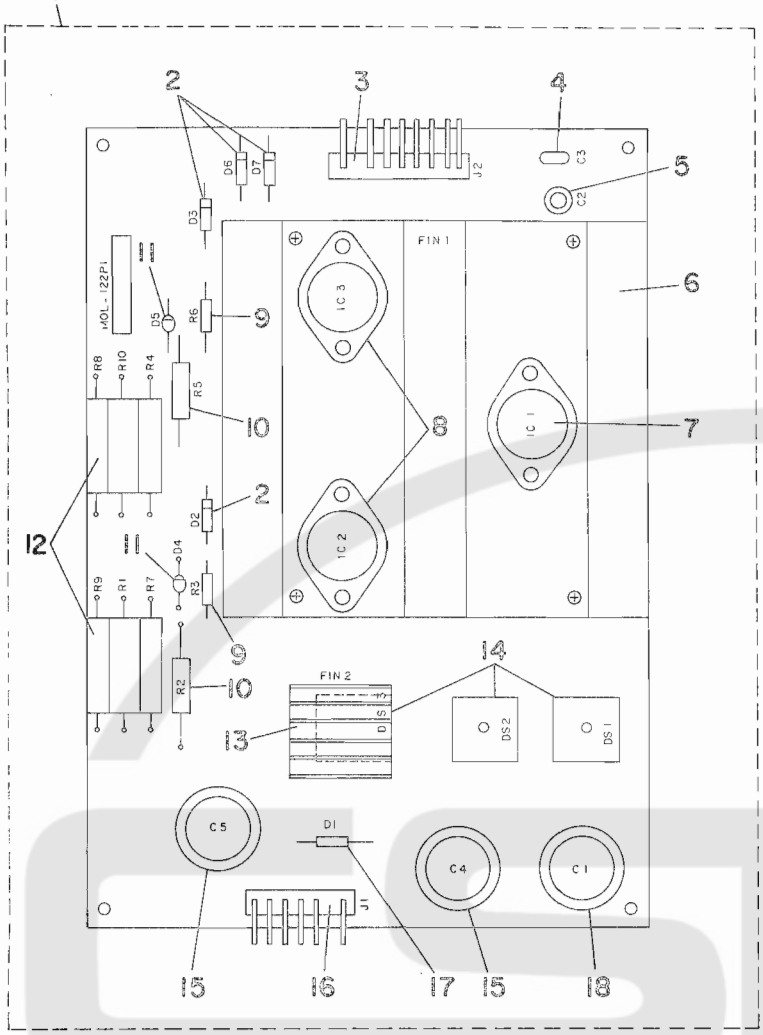

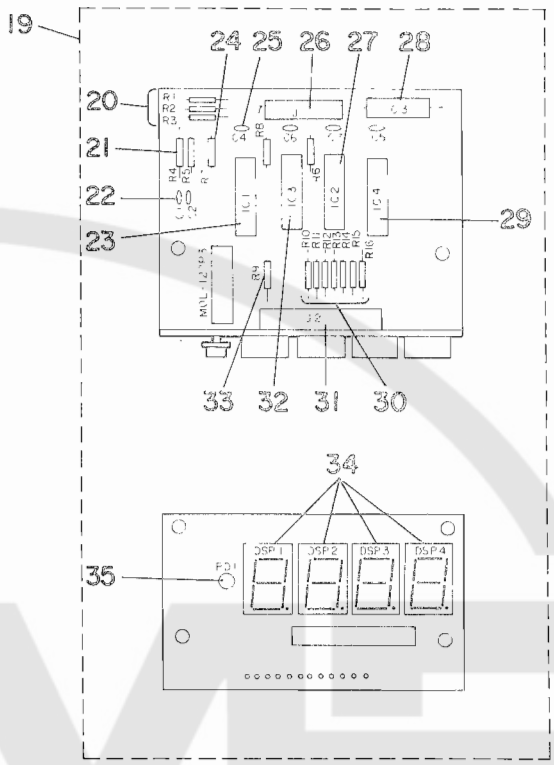

Ref. No.	Note 注記	Part No. 品番	Description	E. C. 変更年月	品名	Amt. Req. 数量
1		G6003-122-0A0	POWER SUPPLY CIRCUIT BOARD ASM		ｼﾞﾂｿｳｽﾞ ﾌﾞﾋﾝﾋﾖｳ	1
2		HG-0002800-00	DIODE SR1FM-8		ﾀﾞｲｵｰﾄﾞ (SR1FM-8)	(4)
3		HK-0194000-30	6-POLE CONNECTOR		ｺﾈｸﾀ	(1)
4		HCL-500B10S1	CAPACITOR		ｺﾝﾃﾞﾝｻ 0.1MF 50V ﾏｲﾗ	(1)
5		HC-0012200-00	CAPACITOR 100MF 16V		ｺﾝﾃﾞﾝｻ	(1)
6		G6075-122-000	RADIATOR		ﾎｳﾈﾂ ﾌｲﾝ	(1)
7		HL-0016100-00	IC TA78005M		IC (TA78005M)	(1)
8		HL-0062700-00	IC (LM317K)		IC	(2)
9		HR-0017010-10	RESISTOR 100 OHM 1/4W		ﾃｲｺｰｷ 100ｵｰﾑ 1/4 ﾀﾝｿﾋﾏｸ	(2)
10		HR-0185012-P0	RESISTOR 1.2 OHM 2W		ﾃｲｺｳｷ 1.2ｵｰﾑ	(2)
11		HG-0027800-00	DIODE (1BZ61)		ﾀﾞｲｵｰﾄﾞ	(2)
12		HR-0186015-10	RESISTOR 150 OHM 5W		ﾃｲｺｳｷ 150ｵｰﾑ	(6)
13		MAV-02171000	RADIATOR		ﾎｰﾈﾂﾊﾞﾝ	(1)
14		HG-0027500-00	DIODE (4B4B41)		ﾀﾞｲｵｰﾄﾞ	(3)
15		HC-0016900-00	CAPACITOR 2200MF 50V		ｺﾝﾃﾞﾝｻ 2200MF 50V ﾃﾞﾝｶｲ	(2)
16		HK-0194000-60	6-POLE CONNECTOR		ｺﾈｸﾀ	(1)
17		HG-0027600-00	DIODE (1ZM30)		ﾀﾞｲｵｰﾄﾞ	(1)
18		HC-0016800-00	CAPACITOR 4700MF 16V		ｺﾝﾃﾞﾝｻ 4700MF 16V ﾃﾞﾝｶｲ	(1)
19		G6211-122-0P0	DISPLAY CIRCUID BOARD ASM.		ﾋｮｰｼﾞｷﾊﾞﾝ ｸﾐ	1
20		HR-0017047-10	RESISTOR 470 OHM 1/4W		ﾃｲｺｰｷ 470ｵｰﾑ 1/4Wﾀﾝｿﾋﾏｸ	(3)
21		HR-0017010-10	RESISTOR 100 OHM 1/4W		ﾃｲｺｰｷ 100ｵｰﾑ 1/4 ﾀﾝｿﾋﾏｸ	(2)
22		HC-0081110-20	CAPACITOR 1000PF 12V		ｺﾝﾃﾞﾝｻ	(2)
23		HL-0012800-00	IC (SN74LS14N)		IC (SN74LS14N)	(1)
24		HR-0017047-30	CARBON FILM RESISTOR 47K		ﾃｲｺｰｷ 47K 1/4W	(3)
25		HCM-250C01S1	CAPACITOR 0.01MF 25V		ｺﾝﾃﾞﾝｻ 0.01MF 25V SC	(4)
26		HK-0211000-70	7-POLE CONNECTOR		ｺﾈｸﾀ	(1)
27		HL-0062300-00	IC (MSM561RS)		IC	(1)
28		HC-0040900-00	ALUMINIUM ELECTROLYTIC CAPACITOR		ｺﾝﾃﾞﾝｻ 33MF 25V ﾃﾞﾝｶｲ	(1)
29		HL-0062200-00	IC (MSL966RS)		IC	(1)
30		HR-0017068-00	RESISTOR 680 OHM 1/4W		ﾃｲｺｰｷ 68ｵｰﾑ 1/4W ﾀﾝｿﾋﾏｸ	(7)
31		HK-0216001-30	13-POLE CONNECTOR		ｺﾈｸﾀ	(1)
32		HL-0062100-00	IC (VSM5502RS)		IC	(1)
33		HR-0017033-10	RESISTOR 330 OHM 1/4W		ﾃｲｺｰｷ 330ｵｰﾑ 5% 1/4W	(1)
34		HG-0026900-00	LIGHT EMITTING DIODE (GL8R04)		ﾀﾞｲｵｰﾄﾞ(GL-8R03)	(4)
35		HG-0027700-00	LIGHT EMITTING DIODE (TLR107)		ﾀﾞｲｵｰﾄﾞ	(1)

23. CORD COMPONENTS
コード関係

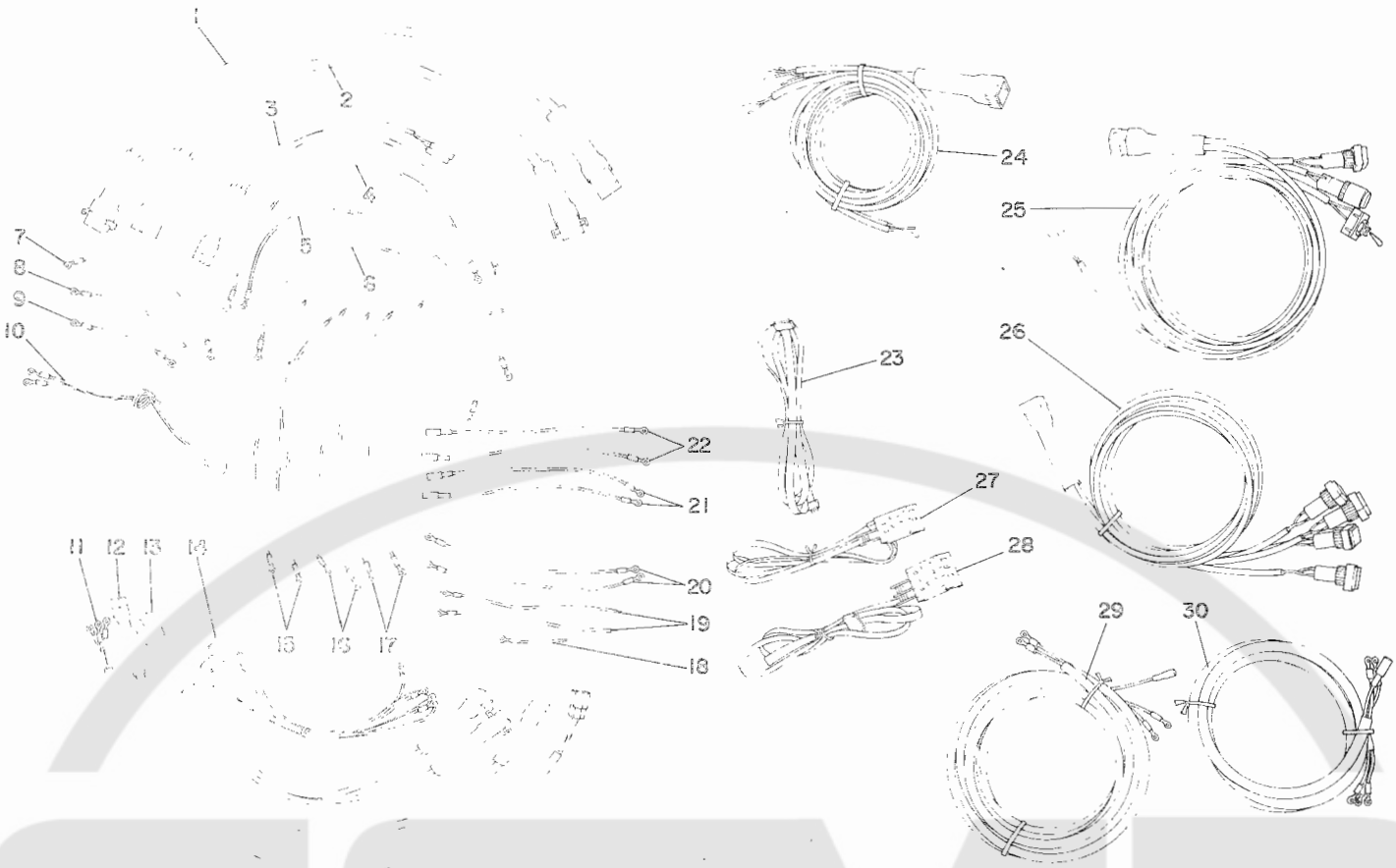

Ref. No.	Note 注記	Part No. 品番	Description	E. C. 変更年月	品名	Amt. Req. 数量
1		G6103-122-0A0	CN3 CONNECTOR CABLE ASM.		CN3 ｹｰﾌﾞﾙ ｸﾐ	1
2		G6102-122-0A0	CN2 CONNECTOR CABLE ASM.		CN2 ｹｰﾌﾞﾙ ｸﾐ	1
3		G6125-122-0A0	MOTOR STARTER CORD ASM.		ｼﾄﾞｳｼﾝｺﾞｳ ｺｰﾄﾞｸﾐ	1
4		G6116-122-0A0	INPUT CORD ASM., RED		ﾆｭｳﾘｮｸ ｺｰﾄﾞｸﾐ ｱｶ	1
5		G6117-122-0A0	INPUT CORD ASM., BLACK		ﾆｭｳﾘｮｸ ｺｰﾄﾞｸﾐ ｸﾛ	1
6		G6120-122-0A0	GROUND WIRE CORD ASM.		ｱｰｽｺｰﾄﾞｸﾐ ICｼｬｰｼ	1
7		G6122-122-0A0	GROUND WIRE CORD ASM.		ｱｰｽｺｰﾄﾞｸﾐ ﾄﾗﾝｽ	1
8		G6124-122-0A0	GROUND WIRE CORD ASM.		ｱｰｽｺｰﾄﾞｸﾐ ｼｬｰｼ	1
9		G6123-122-0A0	GROUND WIRE CORD ASM.		ｱｰｽｺｰﾄﾞｸﾐ ﾌｲﾙﾀ	1
10		G6121-122-0A0	GROUND WIRE CORD ASM.		ｱｰｽｺｰﾄﾞｸﾐ SWﾎﾞﾂｸ	1
11		G6112-122-0A0	MOTOR CORD ASM.		ﾓｰﾀ ｺｰﾄﾞｸﾐ	1
12		G6127-122-0A0	STEPPING MOTOR CORD ASM.		ﾓｰﾀﾚﾝｹﾂｺｰﾄﾞ ｸﾐ	1
13		G6106-122-0A0	CN5 CONNECTOR CABLE ASM.		CN5 ｹｰﾌﾞﾙ ｸﾐ	1
14		G6110-122-0A0	PILOT LAMP CORD ASM.		ﾊﾟｲﾛｯﾄﾗﾝﾌﾟ ｺｰﾄﾞ	1
15		G6114-122-0A0	FUSE CORD ASM., WHITE		ﾋｭｰｽﾞ ｺｰﾄﾞｸﾐ ｼﾛ	1
16		G6113-122-0A0	FUSE CORD ASM., RED		ﾋｭｰｽﾞ ｺｰﾄﾞｸﾐ ｱｶ	1
17		G6115-122-0A0	FUSE CORD ASM., BLACK		ﾋｭｰｽﾞ ｺｰﾄﾞｸﾐ ｸﾛ	1
18		G6126-122-0A0	MOTOR CORD ASM., SHORT		ﾓｰﾀｺﾈｸﾀ ﾀﾝﾁｸｺｰﾄﾞ	1
19	#01	G5760-100-0A0	NOISE FILTER OUT CORD ASM.		ﾉｲｽﾞﾌｲﾙﾀ ｺｰﾄﾞ	1
20	#01	G5759-100-0A0	NOISE FILTER IN CORD ASM.		ﾉｲｽﾞﾌｲﾙﾀ ｺｰﾄﾞ	1
21	#02	G5758-100-0A0	NOISE FILTER OUT CORD ASM.		ﾉｲｽﾞﾌｲﾙﾀ ｺｰﾄﾞ	1
22	#02	G5757-100-0A0	NOISE FILTER IN CORD ASM.		ﾉｲｽﾞﾌｲﾙﾀ ｺｰﾄﾞ	1
23		G6059-122-0A0	DISPLAY CIRCUIT BOARD CORD ASM		ﾋｮｳｼﾞｷﾊﾞﾝ ｺｰﾄﾞ ｸﾐ	1
24		G6104-122-080	CN4 CONNECTOR CABLE ASM.		CN4 ｹｰﾌﾞﾙ ｸﾐ	1
25		G6108-122-0A0	CN8 CONNECTOR CABLE ASM.		CN8 ｹｰﾌﾞﾙ ｸﾐ	1
26		G6107-122-0A0	CN7 CONNECTOR CABLE ASM.		CN7 ｹｰﾌﾞﾙ ｸﾐ	1
27		G6057-122-0A0	LOOP LENGHT SETTING CORD ASM.		ﾙｰﾌﾟ ｾﾂﾃｲｺｰﾄﾞ ｸﾐ	1
28		G6058-122-0A0	BOBBIN THREAD SWITCH CORD ASM.		ｼﾀｲﾄｾﾂﾃｲﾘｮｳ SWｸﾐ	1
29		G6109-122-0A0	POWER SOURCE CORD ASM.		ﾃﾞﾝｹﾞﾝ ｺｰﾄﾞｸﾐ	1
30		G6111-122-0A0	SELECTOR SWITCH CORD ASM.		ｾﾚｸﾄSW ｺｰﾄﾞｸﾐ	1

Note (注記) #01 ..... For 380V　　380V用
#02 ..... For 220 ~ 250V　　220~250V用

24. ACCESSORIES COMPONENTS
付属品関係

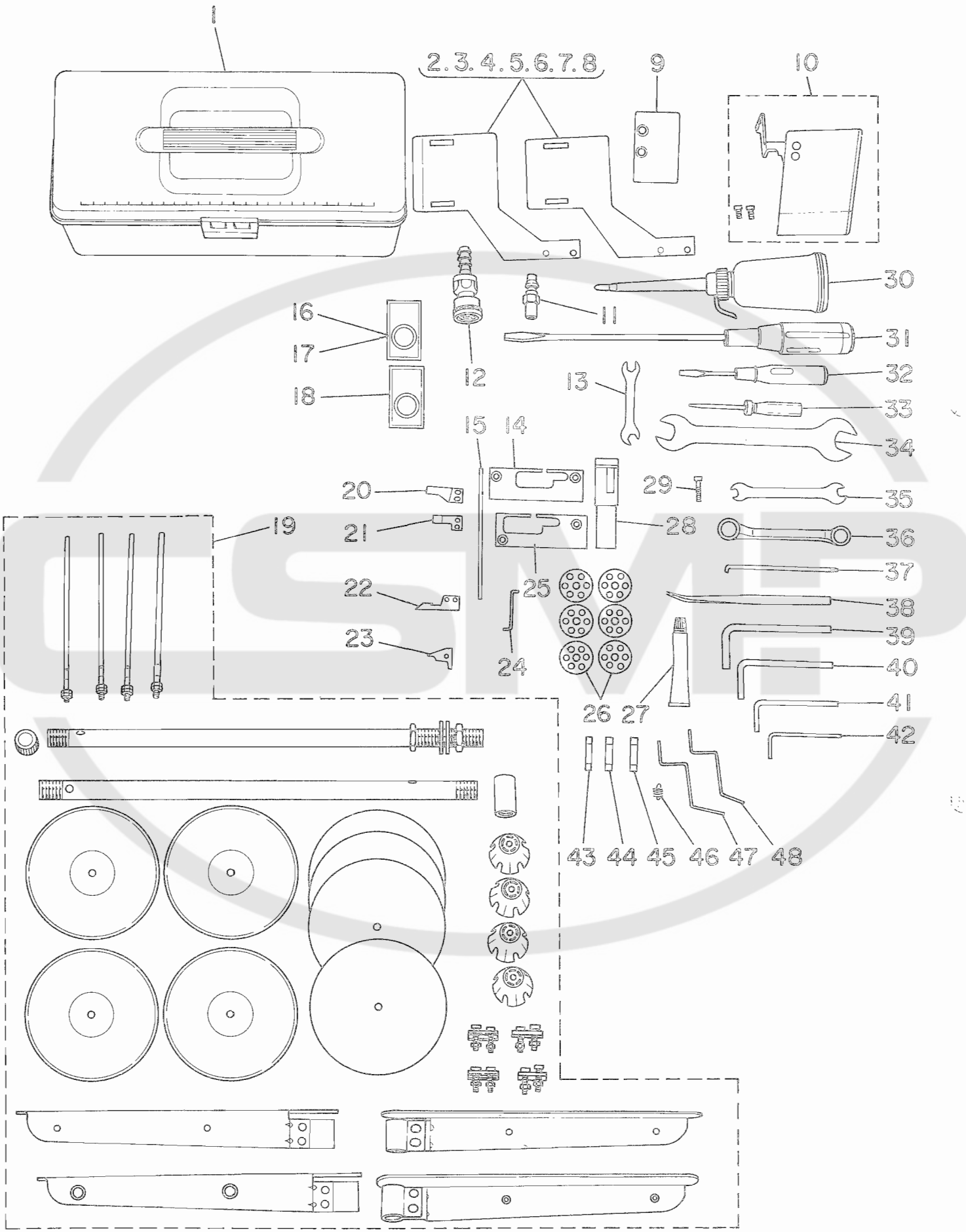

Ref. No.	Note 注記	Part No. 品番	Description	E. C. 変更年月	品名	Amt. Req. 数量
1		G9142-122-000	ACCESSORY BOX		ﾌｿﾞｸﾋﾝﾊﾞｺ	1
2	#01	G2516-122-00B	CLOTH LOWER PLATE 45MM		ﾇﾉｵｻｴｼﾀｲﾀ 45	1
3	#01	G2516-122-00C	CLOTH LOWER PLATE 50MM		ﾇﾉｵｻｴｼﾀｲﾀ 50	1
4	#01	G2516-122-00D	CLOTH LOWER PLATE 55MM		ﾇﾉｵｻｴｼﾀｲﾀ 55	1
5	#01	G2516-122-00E	CLOTH LOWER PLATE 60MM		ﾇﾉｵｻｴｼﾀｲﾀ 60	1
6	#01	G2516-122-00F	CLOTH LOWER PLATE 65MM		ﾇﾉｵｻｴｼﾀｲﾀ 65	1
7	#01	G2516-122-00G	CLOTH LOWER PLATE 70MM		ﾇﾉｵｻｴｼﾀｲﾀ 70	1
8	#01	G2516-122-00H	CLOTH LOWER PLATE 75MM		ﾇﾉｵｻｴｼﾀｲﾀ 75	1
9	#01	G1133-122-00D	FRONT BED COVER		ﾍﾞｯﾄﾞﾏｴﾌﾀ	1
10		G9134-122-0A0	SAFETY PLATE ASM.		ﾌﾟﾚｰﾄ ﾄﾘﾂｹﾀﾞｲ ｸﾐ	1
11		GBC-025080CC	QUICK COUPLING		ｴｱｰﾌﾟﾗｸﾞ	1
12		GHP-0353500,0	QUICK COUPLING		ｴｱｰｿｹｯﾄ	1
13		G9141-122-000	DC SPANNER		DCｽﾊﾟﾅ	1
14		G9131-122-000	GAUGE		ｳｼﾛｶﾄﾞ ｳﾒｽ ｲﾁｹﾞｰｼﾞ	1
15		G5571-100-000	CONNECTOR PIN PULLER		ｺﾈｸﾀｰﾋﾟﾝﾇｷ	1
16		MDP-170B190T	NEEDLE DPX17 #19		ﾊﾘ DPX17 #19-10	10
17	#02	MC-2005012-0T	NEEDLE 20:05 #120		ﾊﾘ 134 120-10	10
18		MDP-1708210T	NEEDLE DPX17 #21		ﾊﾘ DPX17 #21-10	10
19		101-23650	THREAD STAND ASM.		ｲﾄﾀﾃｿｰﾁ ｸﾐ	1
20		G2429-122-000	LOWER FIXED KNIFE		ｼﾀｺﾃｲﾒｽ	1
21		G2430-122-000	FIXED KNIFE AUXILIARY PLATE		ｺﾃｲﾒｽ ﾎｼﾞﾖｲﾀ	1
22		G2428-122-000	LOWER MOVING KNIFE		ｼﾀｲﾄﾞｳﾒｽ	1
23		G2415-122-000	UPPER MOVING KNIFE		ｳﾜﾄﾞｳﾒｽ	1
24		G9132-122-000	JIG		ﾎﾞﾋﾞﾝｹｰｽ ｽｷﾏｹﾞｰｼ	1
25		G9130-122-000	GAUGE		ﾏｴｶﾄﾞｳﾒｽ ｲﾁｹﾞｰｼﾞ	1
26		B9117-563-000	BOBBIN		ﾎﾞﾋﾞﾝ	6
27		G9133-122-000	LINING LUBRICANT OIL		ﾄｸｼｭﾄｿｳｻﾞｲ	1
28	#01	G1802-122-00D	FRONT BUSHING		ｼﾀｼﾞｸ ﾏｴﾒﾀﾙ	1
29		SM-604140C2-TN	SCREW M4X0.7 L=14		ﾛｯｸｱﾅﾎﾞﾙﾄ M4X0.7 L=14	1
30		G9139-122-000	OILER		ｱﾌﾞﾗｻｼ	1
31		G9135-122-000	SCREW DRIVER, LARGE		ﾄﾞﾗｲﾊﾞｰ ﾀﾞｲ	1
32		G9136-122-000	SCREW DRIVER, MIDDLE		ﾄﾞﾗｲﾊﾞｰ ﾁｭｳ	1
33		G9137-122-000	SCREW DRIVER, SMALL		ﾄﾞﾗｲﾊﾞｰ ｼｮｳ	1
34		B9702-761-000	WRENCH (17X19)		ｽﾊﾟﾅ (17X19)	1
35		G5561-100-000	WRENCH 7X8		ｽﾊﾟﾅ 7X8	1
36		G5560-100-000	WRENCH 10X12		ﾒｶﾞﾈﾚﾝﾁ	1
37		G9138-122-000	SCREW DRIVER, LARGE		ﾊﾘｻｷﾄﾞﾗｲﾊﾞｰ	1
38		G5570-100-000	TWEEZERS		ﾋﾟﾝｾｯﾄ	1
39		G5563-100-000	WRENCH 6MM		ｽｸﾘｭｰﾚﾝﾁ 6	1
40		G5564-100-000	WRENCH 5MM		ｽｸﾘｭｰﾚﾝﾁ 5	1
41		G9140-122-000	HEXAGONAL SPANNER 4MM		6ｶｸﾎﾞｳｽﾊﾟﾅ	1
42		G5565-100-000	WRENCH 3MM		ｽｸﾘｭｰﾚﾝﾁ 3	1
43		MAT-80143T00	FUSE, 3A		ﾋｭｰｽﾞ 3A	1
44		E9602-701-000	FUSE 4A		ｶﾞﾗｽｶﾝ ﾋｭｰｽﾞ	1
45		D6110-555-B00	FUSE 5A		ﾋｭｰｽﾞ 5A	1
46		G5366-100-00A	DETECTOR LEVER SPRING		ﾂｷﾞﾒｹﾝｼｭﾂ ﾋﾂﾊﾟﾘﾊﾞﾈ ｷｮｰ	1
47		G5153-100-00A	BELT-LOOP UPPER LIMITER PIN		ｳﾜﾊﾞﾝﾄﾞﾙｰﾌﾟ ﾆｹﾞﾄﾞﾒｶﾞﾈ	1
48		G5153-100-C0C	BELT-LOOP UPPER LIMITER PIN		ｳﾜﾊﾞﾝﾄﾞﾙｰﾌﾟ ﾆｹﾞﾄﾞﾒｶﾞﾈ	1

Note (注記) #01 ..... The gauge parts other than those attached to the sewing machine are in the accessary box.
#02 ..... For Western Europe

ミシン取付部品以外は、付属品に入る。
西欧用

25. EXCLUSIVE PARTS FOR MOL-122P-B (1)
MOL-122P-B専用部品（1）

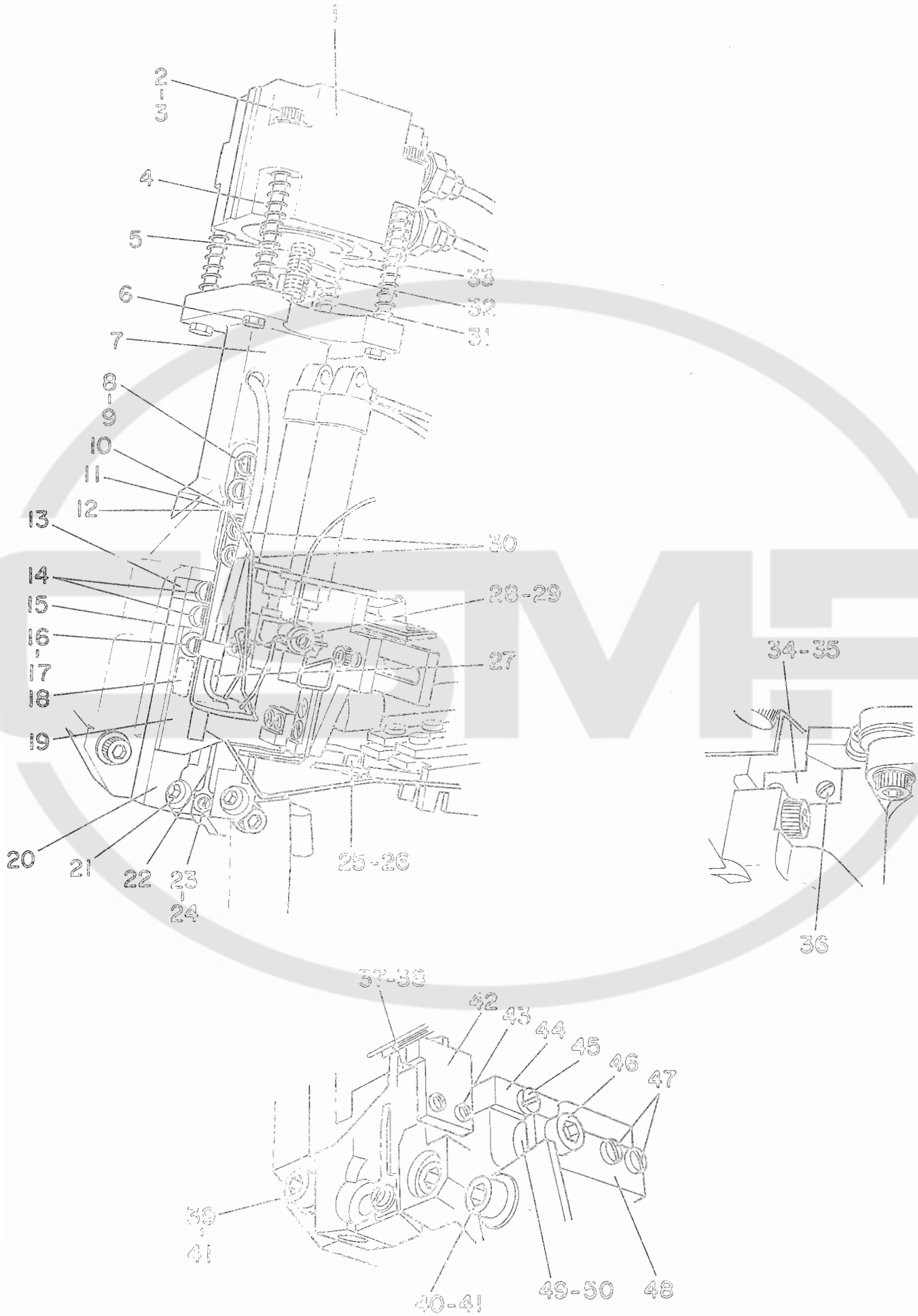

Ref. No.	Note 注記	Part No. 品番	Description	E. C. 変更年月	品名	Amt. Req. 数量
1		PA-3201001-00	KNIFE CYLINDER		ｼﾘﾝﾀﾞ	1
2		SM-6057552-TP	SCREW M5 L=75		ﾛｯｶｸｱﾅﾎﾞﾙﾄ M5 L=75	4
3		WP-0501016-SC	WASHER 5X10.5X1		ﾋﾗｻﾞｶﾞﾈ 5X10.5X1	4
4		65312-122-000	KNIFE CYLINDER SPRING		ﾒｽｼﾘﾝﾀﾞｰ ｳｹﾊﾞﾈ	4
5		65315-122-000	KNIFE SHAFT CONNECTING SCREW		ﾒｽｼｬﾌﾄ ﾚﾝｹﾂﾈｼﾞ	1
6		NP-0050550-SD	NUT M5X0.8		ﾛｯｶｸﾅｯﾄ M5X0.8 ﾋﾀﾞﾘﾈｼﾞ	4
7		65303-122-000	KNIFE METAL BASE		ﾒｽﾒﾀﾙﾄﾞﾀﾞｲ	1
8		SS-7090710-SL	SCREW 9/64-40 L=6.8		ﾏﾙﾋﾗﾈｼﾞ 9/64-40 L=6.8	2
9		WP-0450801-SD	WASHER 4.5X10.0X0.8		ﾋﾗｻﾞｶﾞﾈ 4.5X10X0.8	2
10	#01	65334-122-000	BELT-LOOP UPPER LIMITER PIN		ﾆｹﾞﾄﾒｶﾞﾈ	1
11	#02	65335-122-000	BELT-LOOP UPPER LIMITER PIN		ﾆｹﾞﾄﾒｶﾞﾈ	1
12	#03	65336-122-000	BELT-LOOP UPPER LIMITER PIN		ﾆｹﾞﾄﾒｶﾞﾈ	1
13		65317-122-000	KNIFE SHAFT SUPPORT PLATE		ﾒｽｼｬﾌﾄ ｻｻｴｶﾞﾈ	1
14		SS-7110910-SP	SCREW		ﾏﾙﾋﾗﾈｼﾞ 11/64-40 L=8.5	2
15		65319-122-000	KNIFE SLIDE SHAFT BASE		ｽﾗｲﾄﾞｼｬﾌﾄ ﾄﾞﾀﾞｲ	1
16		SS-7090910-SL	SCREW 9/64-40 L=4.6		ﾏﾙﾋﾗﾈｼﾞ 9/64-40 L=4.6	1
17		WP-0450801-SD	WASHER 4.5X10.0X0.8		ﾋﾗｻﾞｶﾞﾈ 4.5X10X0.8	1
18		65318-122-000	KNIFE SLIDE SHAFT		ﾒｽｽﾗｲﾄﾞ ｼｬﾌﾄ	1
19		65330-122-000	LOOP SUPPORT PLATE		ﾙｰﾌﾟｳｹ ｻｷｶﾞﾈ	1
20		65304-122-000	FIXED KNIFE BASE		ｺﾃｲﾒｽ ﾄﾘﾂｹﾄﾞﾀﾞｲ	1
21		SM-6062002-TP	SCREW M6 L=20		ﾛｯｶｸｱﾅﾎﾞﾙﾄ M6 L=20	2
22		65337-122-000	LOOP LIMITER PIN		ﾙｰﾌﾟﾆｹﾞﾄﾒﾋﾟﾝ	2
23		SS-6080410-SP	SCREW 1/8-44 L=4		ﾋﾗﾈｼﾞ 1/8-44 L=4	1
24		WP-0750516-MZ	WASHER 3.5X7.7X0.45		ﾋﾗｻﾞｶﾞﾈ 3.5X7.7X0.45	1
25		65331-122-000	REAR FOLDER SHAFT GUIDE SLEEVE		ｼｬﾌﾄ ｱﾝﾅｲﾒﾀﾙ	1
26		SS-7110910-SP	SCREW 11/64-40 L=7.8		ﾏﾙﾋﾗﾈｼﾞ 11/64-40 L=7.8	2
27		65332-122-000	BELT-LOOP LIMITER		ﾊﾞﾝﾄﾞﾙｰﾌﾟ ﾄﾒﾆｹﾞ	1
28		65323-122-000	PRESSER SPRING, FRONT		ﾏｴﾄﾞｳﾒｽ ｵｻｴﾊﾞﾈ	1
29		NM-6050550-SD	NUT M5X0.8		ﾛｯｶｸﾅｯﾄ M5X0.8 ﾋﾀﾞﾘﾈｼﾞ	1
30		SS-7090710-SL	SCREW 9/64-40 L=6.8		ﾏﾙﾋﾗﾈｼﾞ 9/64-40 L=6.8	2
31		65316-122-000	KNIFE SHAFT		ﾒｽｼｬﾌﾄ	1
32		65314-122-000	STROKE ADJUSTING COLLAR PLATE		ﾁｮｳｾｲｶﾗｰ ﾄﾒｲﾀ	1
33		65313-122-000	STROKE ADJUSTING COLLAR		ｽﾄﾛｰｸ ﾁｮｳｾｲｶﾗｰ	1
34		65326-122-000	LOOP GUIDE UPPER SPRING PLATE		ｶﾞｲﾄﾞｳｪ ﾊﾞﾈｲﾀ	1
35		65327-122-000	LOOP GUIDE UPPER SPRING PLATE		ｶﾞｲﾄﾞｼﾀ ﾊﾞﾈｲﾀ	1
36		SS-6080410-SP	SCREW 1/8-44 L=4		ﾋﾗﾈｼﾞ 1/8-44 L=4	2
37		65305-122-000	FIXED KNIFE		ｺﾃｲﾒｽ	1
38		SM-6041402-TN	SCREW M4X0.7 L=14		ﾛｯｶｸｱﾅﾎﾞﾙﾄ M4X0.7 L=14	2
39		SM-6065002-TP	SCREW M6 L=50		ﾛｯｶｸｱﾅﾎﾞﾙﾄ M6 L=50	1
40		SM-6064002-YP	SCREW M6 L=40		ﾛｯｶｸｱﾅﾎﾞﾙﾄ M6 L=40	1
41		WP-6061001-SD	WASHER		ﾋﾗｻﾞｶﾞﾈ ﾐｶﾞｷﾏﾙ M6	2
42		65328-122-000	CHIP REMOVE BLOCK		ﾄﾞｳﾒｽ ﾁｯﾌﾟｵﾄｼ	1
43		SS-4080410-SP	SCREW 1/8-44 L=6.4		ﾅﾍﾞﾈｼﾞ 1/8-44 L=6.4	2
44		65325-122-000	LOOP GUIDE SPRING PLATE BASE		ﾊﾞﾈｲﾀ ﾄﾘﾂｹﾄﾞﾀﾞｲ	1
45		SS-6091210-TP	SCREW 9/64-40 L=12		ﾋﾗﾈｼﾞ 9/64-40 L=12	1
46		SM-6062002-TP	SCREW M6 L=20		ﾛｯｶｸｱﾅﾎﾞﾙﾄ M6 L=20	1
47		SS-6111010-SP	SCREW 11/64-40 L= 9.5		ﾋﾗﾈｼﾞ 11/64-40 L=9.5	2
48		65203-100-000	PLATE		ﾙｰﾌﾟﾊﾊﾞ ﾁｮｰｾｲﾈｼﾞｲﾀ	1
49		65204-100-000	COLLAR		ﾙｰﾌﾟﾊﾊﾞ ﾁｮｰｾｲﾈｼﾞｲﾀ ｶﾗｰ	1
50		SS-3110310-SP	SCREW 11/64-40 L= 2.8		ﾄﾒﾈｼﾞ 11/64-40 L=2.8	2

Note (注記) #01 ..... For 55 ~ 62 mm (2-11/64" ~ 2-7/16") 55～62mm用
#02 ..... For 63 ~ 70 mm (2-31/64" ~ 2-3/4") 63～70mm用
#03 ..... For 71 ~ 78 mm (2-51/64" ~ 3-5/64") 71～78mm用

26. EXCLUSIVE PARTS FOR MOL-122P-B (2)
MOL-122P-B専用部品(2)

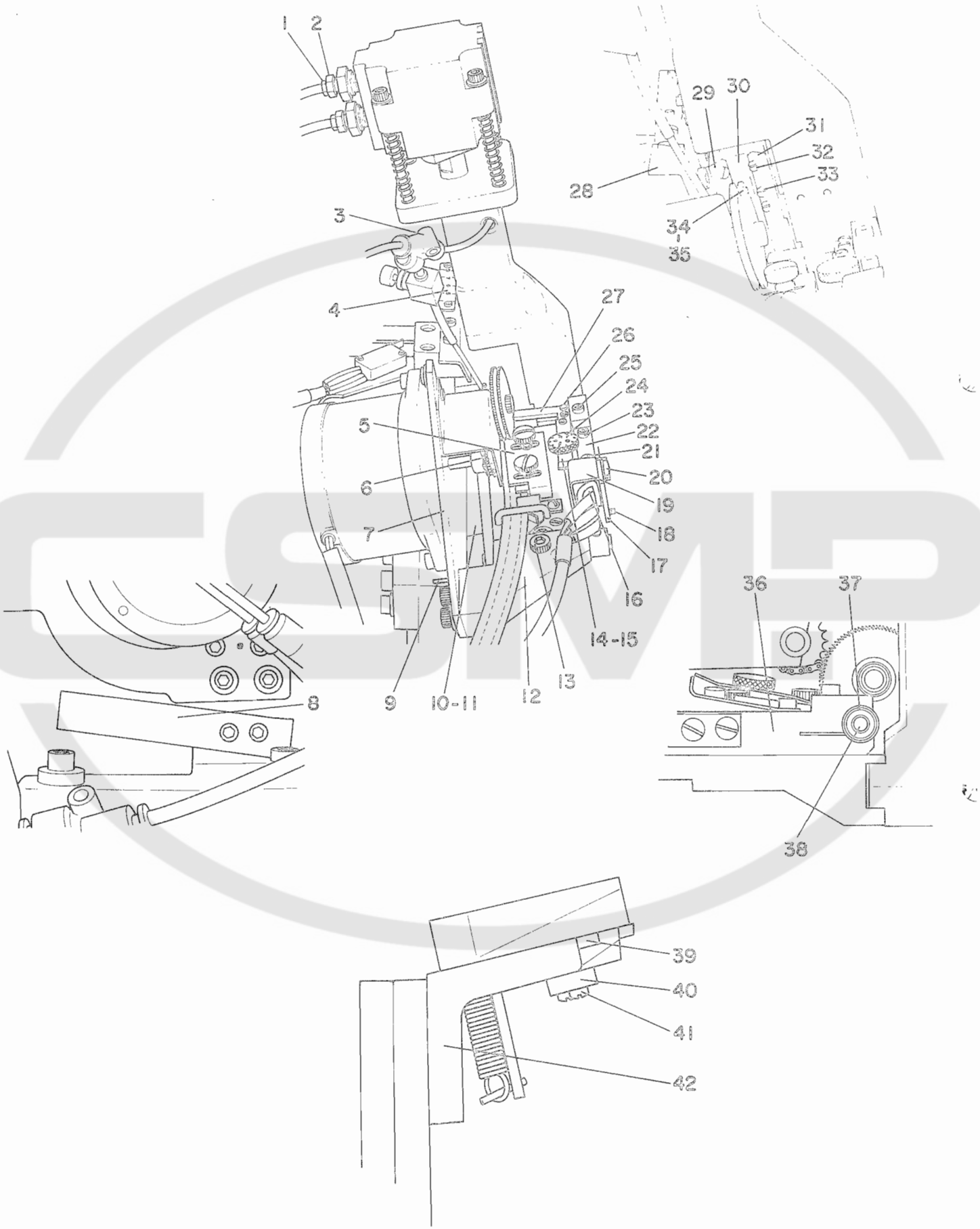

Ref. No.	Note 注記	Part No. 品番	Description	E. C. 変更年月	品名	Amt. Req. 数量
1		G5019-100-000	BARBED FITTING JOINT		ﾊﾞｰﾌﾞ ﾂｷﾞﾃ	2
2		G5535-100-000	BUSHING		ﾌﾞｯｼｭ	2
3		PJ-3080400-01	QUICK COUPLING		ﾜﾝﾀﾂﾁﾂｷﾞﾃ	1
4		G5103-200-000	SCALE		ｵｸﾘｿｰﾁｶﾊﾞｰ ﾒﾓﾘﾊﾞﾝ	1
5		G5226-100-CA0	ADJUST BINDER ASM.		ｱｼﾞﾔｽﾄﾊﾞｲﾝﾀﾞｰ ｸﾐ	1
6		G5229-100-000	MOTOR CHAIN		ｵｸﾘﾀﾞｼ ﾓｰﾀﾁｪｰﾝ	1
7		G5310-122-000	LOOP FEEDING MOTOR PLATE		ﾓｰﾀﾄﾘﾂｹｲﾀ	1
8		G5238-100-000	AUXILIARY BLOCK		ﾎｼﾞｮ ﾚｶﾞﾀ	1
9		PS-0300102-KO	SPRING PIN 3.0X10		ｽﾌﾟﾘﾝｸﾞﾋﾟﾝ 3.0X10	1
10		G5311-122-000	LOOP FEEDING ROLLER LEVER		ｵｸﾘﾀﾞｼ ﾛｰﾗﾚﾊﾞｰ	1
11		SM-6052602-TP	SCREW M5X0.8 L=28		ﾛｯｸｱｰﾅﾎﾞﾙﾄ M5X0.8 L=28	1
12		G5306-122-000	LOOP FEEDING BASE		ﾙｰﾌﾟｵｸﾘﾀﾞｼ ﾄﾞﾀﾞｲ	1
13		SM-6063502-TR	SCREW M6 L=35		ﾛｯｸｱｰﾅﾎﾞﾙﾄ	2
14		G5232-100-000	DETECTION ADJUSTING SPRING		ﾂｷﾞﾒｹﾝｼｭﾂ ﾁｮｰｾｲﾊﾞﾈ	1
15		G5233-100-000	SPRING		ﾂｷﾞﾒｹﾝｼｭﾂﾊﾞﾈ	1
16		G5237-100-000	MICROSWITCH		ﾂｷﾞﾒｹﾝｼｭﾂ ｽｲｯﾁ	1
17		G5235-100-000	DETECTOR MOUNTING PLATE		ﾂｷﾞﾒｹﾝｼｭﾂ ｽｲｯﾁﾄﾘﾂｹｲﾀ	1
18		SM-4061601-SC	SCREW M2.6 L=16		ﾅﾍﾞｺﾈｼﾞ M2.6 L=16	2
19		G5236-100-000	DETECTOR COVER		ﾂｷﾞﾒｹﾝｼｭﾂ ｽｲｯﾁｶﾊﾞｰ	1
20		SS-6111010-SP	SCREW 11/64-40 L= 9.5		ﾋﾗﾈｼﾞ 11/64-40 L=9.5	2
21		SS-7111410-SP	SCREW 11/64-40 L=14		ﾏﾙﾋﾗﾈｼﾞ 11/64-40 L=14	1
22		G5234-100-000	SPRING STOPPER		ﾂｷﾞﾒｹﾝｼｭﾂ ﾁｮｰｾｲﾊﾞﾈﾄﾞﾒ	1
23		SM-6052502-TP	SCREW M5X0.8 L=25		ﾛｯｸｱｰﾅﾎﾞﾙﾄ	1
24		G5233-200-000	REGULATING SCREW		ﾂｷﾞﾒｹﾝｼｭﾂ ﾁｮｰｾﾂﾈｼﾞ	1
25		SM-6053202-TP	SCREW M5X0.8 L=32		ﾛｯｸｱｰﾅﾎﾞﾙﾄ M5X0.8 L=32	1
26		SS-4080610-SP	SCREW 1/8-44 L=6.4		ﾅﾍﾞﾈｼﾞ 1/8-44 L=6.4	3
27		G5231-100-000	DETECTION LEVER		ﾂｷﾞﾒｹﾝｼｭﾂｲﾀ	1
28		G5332-122-000	CHIP REMOVE AIR PIPE		ｷﾘｸｽﾞﾊﾞｷｭｱｰﾊﾟｲﾌﾟ	1
29		G5321-122-000	MOVING KNIFE, LEFT		ﾋﾀﾞﾘﾄﾞｳﾒｽ	2
30		G5320-122-000	MOVING KNIFE BASE		ﾄﾞｳﾒｽ ﾄﾘﾂｹﾄﾞﾀﾞｲ	2
31		G5322-122-000	MOVING KNIFE, RIGHT		ﾐｷﾞﾄﾞｳﾒｽ	2
32		SS-4080610-SP	SCREW 1/8-44 L=6.4		ﾅﾍﾞﾈｼﾞ 1/8-44 L=6.4	8
33		G5339-122-000	SCREW		ﾄﾞｳﾒｽ ﾄﾘﾂｹﾈｼﾞ	4
34		G5324-122-000	PRESSURE ADJUSTING SCREW		ｱﾂﾘｮｳｸﾞ ﾁｮｳｾｲﾈｼﾞ	1
35		G5329-122-000	PRESSER SPRING, REAR		ｳｼﾛﾄﾞｳﾒｽ ｵｻｴﾊﾞﾈ	1
36		G5230-100-000	SLEEVE		ﾂｷﾞﾒｹﾝｼｭﾂﾒﾀﾙ	1
37		G2431-122-000	BEARING		ｼﾀﾒｽｼﾞｸ ﾍﾞｱﾘﾝｸﾞ	2
38		G5230-200-000	DETECTOR BRACKET STUD		ﾂｷﾞﾒｹﾝｼｭﾂ ﾒﾀﾙｼﾞｸ	1
39		G5308-122-000	LOOP FEEDING BASE GUIDE		ﾄﾞﾀﾞｲ ｶﾞｲﾄﾞ	1
40		G5309-122-000	NUT PLATE		ﾄﾞﾀﾞｲ ﾄﾒｲﾀﾅﾂﾄ	1
41		SS-6091210-TP	SCREW 9/64-40 L=12		ﾋﾗﾈｼﾞ 9/64-40 L=12	2
42		G5307-122-000	LOOP FEEDING L-HEAD BASE		ﾄﾞﾀﾞｲ ﾄﾘﾂｹ ﾚｶﾞﾀ	1

Part No. 品番	Page 頁	Ref. No.
B1129-521-000	18	25
B1210-526-0A0	6	1
B1305-055-000	8	30
B1307-055-000	8	31
B1308-055-000	8	33
B1309-055-000	8	34
B1310-055-000	8	29
B1311-055-000	8	35
B1314-055-000	8	28
B1314-057-000	8	18
B1408-526-000	6	57
B1414-232-000	6	54
B1814-563-000	8	65
B1815-563-000	8	61
B1816-521-0A0	8	11
B1817-051-080	8	13
B1818-051-800	8	60
B1820-051-000	8	45
B1821-051-0A0	8	46
B1822-563-000	8	48
B1823-051-0A0	8	50
B1824-563-000	8	44
B1843-563-000	8	54
B1906-526-0A0	6	60
B1907-526-0A0	6	58
B2107-816-000	16	52
B2107-816-000	22	17
B2107-816-000	25	18
B2201-980-0A0	10	45
B2205-980-0A0	6	27
B2207-280-000	10	43
B2501-280-000	10	15
B2502-280-B0B	10	16
B3116-512-00B	18	48
B3120-125-000	18	47
B3123-527-000	18	9
B3125-012-000	18	27
B3125-012-000	19	19
B3125-527-000	18	29
B3126-012-000	19	17
B3126-051-000	18	44
B3128-051-000	18	10
B3128-527-000	18	33
B3129-012-800	19	18
B3129-526-000	18	46
B3132-051-000	18	45
B3137-527-0A0	18	34
B3138-051-000	18	13
B3138-527-000	18	26
B3139-527-000	18	35
B3140-527-0A0	18	30
B3141-527-000	18	28
B3142-527-000	18	36
B3143-527-000	18	37
B3214-012-0A0	19	22
B3223-012-0A0	19	14
B3228-012-000	19	24
B3229-012-000	19	25
B9102-761-000	38	34
B9103-771-000	32	3
B9117-563-000	38	26
CQ-2020000-00	8	47
CQ-2020000-00	8	51
CQ-3030000-00	6	2
D2205-932-AA0	6	25
D2205-983-QA0	6	26
D6028-555-B0B	28	8
D6029-555-B0A	28	15
D6110-555-800	28	20
D6110-555-800	38	45
D8604-761-C0B	28	9
E9602-701-000	38	44
E9603-603-000	34	39
GBC-02508000	38	11
GBC-02611000	28	21
GBC-02618000	28	13
GBC-02620000	28	10
GHP-03520000	32	22
GHP-03524000	21	17
GHP-03524000	24	21
GHP-03524000	27	23
GHP-03524000	32	18
GHP-03525000	26	23
GHP-03525000	27	22
GHP-03525000	32	16
GHP-03535000	38	12
G1103-122-000	2	39
G1104-122-000	2	40
G1105-122-000	2	41
G1106-122-0A0	2	43
G1107-122-000	2	45
G1109-122-000	2	24
G1110-122-000	2	29
G1111-122-000	2	31
G1112-122-000	2	25
G1113-122-000	2	20
G1114-122-000	2	35
G1115-122-000	2	36
G1116-122-000	2	8
G1117-122-000	2	10
G1118-122-000	10	57
G1119-122-000	2	6
G1120-122-000	2	48
G1121-122-000	2	47
G1122-122-000	2	49
G1123-122-000	2	7
G1126-122-000	2	16
G1127-122-000	2	18
G1128-122-000	2	51
G1129-122-000	2	34
G1130-122-000	4	8
G1131-122-00A	4	14
G1131-122-000	4	13
G1132-122-000	4	20
G1133-122-00D	4	22
G1133-122-00D	38	9
G1133-122-000	4	21
G1134-122-000	4	4
G1135-122-000	4	1
G1136-122-000	4	3
G1137-122-000	4	6
G1138-122-000	4	11
G1139-122-000	4	10
G1140-122-000	4	25
G1141-122-00A	4	19
G1141-122-000	4	18
G1143-122-000	16	42
G1144-122-000	2	28
G1145-122-000	4	15
G1147-122-000	2	53
G1201-122-000	6	3
G1202-122-000	6	13
G1203-122-000	6	8
G1204-122-000	6	24
G1205-122-000	6	21
G1206-122-000	6	30
G1207-122-000	6	11
G1208-122-000	6	32
G1209-122-000	6	33
G1210-122-000	6	19
G1211-122-000	6	10
G1212-122-000	6	20
G1301-122-000	6	29
G1303-122-000	2	21
G1304-122-000	2	23
G1401-122-000	6	35
G1402-122-000	6	36
G1403-122-000	6	37
G1404-122-000	6	52
G1405-122-0A0	6	55
G1406-122-0AA	6	42
G1406-122-0A0	6	40
G1407-122-000	6	45
G1408-122-000	6	50
G1409-122-00A	6	43
G1409-122-000	6	41
G1411-122-000	2	4
G1801-122-000	8	1
G1802-122-00A	8	7
G1802-122-00B	8	8
G1802-122-00C	8	4
G1802-122-00D	8	5
G1802-122-00D	38	28
G1802-122-000	8	6
G1803-122-000	8	16
G1804-122-000	8	23
G1805-122-000	8	20
G1806-122-000	8	2
G1807-122-0A0	8	25
G1807-122-000	8	26
G1808-122-00C	8	22
G1809-122-0A0	8	38
G1809-122-080	8	37
G1810-122-0A0	8	39
G1811-122-00C	8	40
G1812-122-0A0	8	62
G1814-122-0A0	8	52
G1816-122-000	8	41
G1901-122-000	6	59
G1902-122-000	6	63
G1903-122-000	6	62
G2101-122-000	16	1
G2102-122-000	16	3
G2103-122-000	16	32
G2104-122-000	16	13
G2105-122-000	16	11
G2106-122-000	16	9
G2107-122-000	16	16
G2108-122-000	16	17
G2109-122-000	16	15
G2110-122-000	16	12
G2111-122-000	16	33
G2114-122-000	16	30
G2115-122-000	16	31
G2201-122-00A	10	2
G2201-122-00B	10	3
G2201-122-000	10	1
G2202-122-000	6	17
G2203-122-000	6	15
G2204-122-000	6	16
G2205-122-AA0	10	40
G2205-122-0A0	10	41
G2205-122-0A0	10	42
G2206-122-0A0	10	38
G2207-122-000	10	47
G2208-122-00A	10	5
G2208-122-00B	10	6
G2208-122-000	10	4
G2209-122-000	10	37
G2401-122-000	14	29
G2402-122-000	14	41
G2403-122-000	14	16
G2404-122-000	14	27
G2405-122-000	14	34
G2406-122-000	14	3
G2407-122-000	14	4
G2408-122-000	14	33
G2409-122-000	16	8
G2410-122-000	16	7
G2411-122-000	16	19
G2412-122-000	16	20
G2413-122-000	16	29
G2414-122-000	16	24
G2415-122-000	16	25
G2415-122-000	38	23
G2416-122-000	16	27
G2417-122-000	16	26
G2418-122-000	16	23
G2419-122-000	14	2
G2420-122-000	14	1
G2421-122-000	14	32
G2425-122-000	16	39
G2426-122-000	16	36
G2427-122-0A0	16	44
G2428-122-000	16	56
G2428-122-000	38	22
G2429-122-000	16	46
G2429-122-000	38	20
G2430-122-000	16	47
G2430-122-000	38	21
G2431-122-000	16	43
G2431-122-000	42	37
G2432-122-000	16	60
G2433-122-000	16	58
G2434-122-000	16	50
G2435-122-0A0	16	54
G2436-122-000	16	34
G2436-122-000	18	63
G2501-122-000	12	59
G2502-122-000	12	61
G2503-122-000	12	48
G2504-122-000	14	23
G2505-122-000	14	36
G2506-122-000	14	21
G2507-122-000	14	25
G2508-122-000	14	35
G2509-122-000	12	56
G2510-122-000	12	53
G2511-122-0A0	12	51
G2512-122-000	12	58
G2513-122-000	14	11
G2514-122-000	14	14
G2515-122-000	14	15
G2516-122-00A	4	39
G2516-122-00B	4	40
G2516-122-00B	38	2
G2516-122-00C	4	41
G2516-122-00C	38	3
G2516-122-00D	4	42
G2516-122-00D	38	4
G2516-122-00E	4	43
G2516-122-00E	38	5
G2516-122-00F	4	44
G2516-122-00F	38	6
G2516-122-00G	4	45
G2516-122-00G	38	7
G2516-122-00H	4	46
G2516-122-00H	38	8
G2517-122-0A0	12	65
G2518-122-000	12	62
G2519-122-000	4	36
G2520-122-000	12	6
G2521-122-000	12	14
G2522-122-000	12	12
G2523-122-0A0	12	16
G2524-122-0A0	12	9
G2525-122-000	12	11
G2526-122-0A0	12	7
G2527-122-000	10	24
G2528-122-000	10	23
G2529-122-0A0	10	21
G2530-122-000	10	14
G2531-122-000	10	27
G2532-122-000	12	1
G2533-122-00A	10	18
G2533-122-000	10	17
G2534-122-000	12	35
G2535-122-000	12	39
G2536-122-000	4	30
G2537-122-000	4	28
G2538-122-000	4	27
G2539-122-000	4	29
G2540-122-000	4	35
G2541-122-000	12	31
G2542-122-000	12	36
G2543-122-000	4	31
G2544-122-00A	12	34
G2544-122-000	12	33
G2545-122-000	10	31
G2546-122-000	10	35
G2547-122-0A0	10	34

Part No.	Page II	Ref. No.	Part No.	Page II	Ref. No.
[illegible]	26	2	[illegible]-000	24	31
[illegible]	21	9	[illegible]-100-000	24	34
[illegible]	21	38	[illegible]-100-000	24	9
[illegible]	21	28	[illegible]-100-000	24	37
[illegible]	21	73	[illegible]-008	22	11
[illegible]	24	56	[illegible]-100-00A	22	4
[illegible]	21	13	[illegible]-122-000	40	7
[illegible]	20	26	[illegible]-122-000	40	20
[illegible]	21	10	[illegible]-100-00A	20	29
[illegible]	21	14	[illegible]-122-000	40	37
[illegible]	22	25	[illegible]-122-000	42	12
[illegible]	18	62	[illegible]-100-000	25	7
[illegible]	32	21	[illegible]-122-000	42	42
[illegible]	30	19	[illegible]-122-000	42	39
[illegible]	30	21	[illegible]-122-000	42	40
[illegible]	40	48	[illegible]-100-000	25	8
[illegible]	40	49	[illegible]-122-000	42	7
[illegible]	30	37	[illegible]-122-000	42	10
[illegible]	20	32	[illegible]-122-000	40	4
[illegible]	42	5	[illegible]-122-000	40	33
[illegible]	42	6	[illegible]-122-000	40	32
[illegible]	42	36	[illegible]-100-00A	27	31
[illegible]	42	39	[illegible]-122-000	40	5
[illegible]	42	37	[illegible]-122-000	40	31
[illegible]	42	14	[illegible]-122-000	40	13
[illegible]	42	15	[illegible]-122-000	40	18
[illegible]	42	22	[illegible]-122-000	40	15
[illegible]	42	17	[illegible]-122-000	42	30
[illegible]	42	24	[illegible]-122-000	42	29
[illegible]	42	19	[illegible]-122-000	42	31
[illegible]	42	16	[illegible]-122-000	40	23
[illegible]	42	3	[illegible]-000	42	34
[illegible]	24	10	[illegible]-122-000	40	44
[illegible]	24	12	[illegible]-122-000	40	34
[illegible]	24	5	[illegible]-122-000	40	35
[illegible]	24	8	[illegible]-122-000	40	42
[illegible]	24	2	[illegible]-122-000	42	35
[illegible]	24	4	[illegible]-122-000	40	19
[illegible]	24	7	[illegible]-122-000	40	22
[illegible]	26	10	[illegible]-122-000	42	23
[illegible]	24	52	[illegible]-122-000	40	27
[illegible]	24	35	[illegible]-122-000	40	10
[illegible]	24	33	[illegible]-122-000	40	11
[illegible]	24	33	[illegible]-122-000	40	12
[illegible]	24	36	[illegible]-122-000	40	25
[illegible]	26	30	[illegible]-122-000	42	33
[illegible]	21	34	[illegible]-100-00B	27	29
[illegible]	21	30	[illegible]-100-00A	26	21
[illegible]	24	40	[illegible]-100-00B	26	13
[illegible]	24	17	[illegible]-100-00A	27	4
[illegible]	24	16	[illegible]-100-00B	27	5
[illegible]	24	25	[illegible]-100-000	27	1
[illegible]	24	20	[illegible]-100-000	27	21
[illegible]	24	57	[illegible]-100-000	27	25
[illegible]	24	45	[illegible]-100-000	27	19
[illegible]	24	62	[illegible]-100-000	27	36
[illegible]	24	46	[illegible]-100-000	27	2
[illegible]	24	38	[illegible]-100-000	27	17
[illegible]	21	26	[illegible]-100-000	27	12
[illegible]	26	43	[illegible]-100-000	27	6
[illegible]	21	21	[illegible]-100-00A	27	15
[illegible]	21	20	[illegible]-100-00A	38	46
[illegible]	24	23	[illegible]-100-000	27	14
[illegible]	24	47	[illegible]-100-000	27	16
[illegible]	24	54	[illegible]-100-000	26	40
[illegible]	24	51	[illegible]-100-00A	26	30
[illegible]	24	52	[illegible]-100-00A	26	32
[illegible]	24	48	[illegible]-100-000	26	31
[illegible]	26	27	[illegible]-100-000	26	20
[illegible]	24	15	[illegible]-100-000	26	17
[illegible]	24	28	[illegible]-100-000	27	27
[illegible]	24	29	[illegible]-100-000	27	28
[illegible]	26	44	[illegible]-100-000	26	25
[illegible]	26	47	[illegible]-100-000	26	1
[illegible]	24	27	[illegible]-100-000	26	8
[illegible]	21	7	[illegible]-100-000	26	15
[illegible]	14	19	[illegible]-100-000	27	13
[illegible]	24	22	[illegible]-100-0A0	30	16
[illegible]	24	3	[illegible]-100-0A0	30	1
[illegible]	26	6	[illegible]-100-000	30	11

Part No. 品番	Page 頁	Ref. No.
G5418-122-000	30	15
G5419-100-000	30	17
G5420-100-000	30	9
G5421-100-000	30	12
G5436-100-000	28	25
G5453-100-000	30	53
G5454-100-00A	30	54
G5464-100-000	10	63
G5521-100-000	32	6
G5522-100-000	32	14
G5522-100-000	32	40
G5524-100-000	32	42
G5525-100-000	32	23
G5533-100-000	32	41
G5534-100-000	32	38
G5535-100-000	30	60
G5535-100-000	32	39
G5535-100-000	42	2
G5552-500-000	30	18
G5560-100-000	38	36
G5561-100-000	38	35
G5563-100-000	38	39
G5564-100-000	38	40
G5565-100-000	38	42
G5570-100-000	38	38
G5571-100-000	38	15
G5618-500-000	18	20
G5701-100-00A	25	4
G5701-100-000	25	3
G5704-100-000	27	34
G5705-100-000	25	14
G5706-100-000	22	7
G5707-100-000	27	33
G5707-500-000	30	59
G5708-100-000	25	13
G5709-100-0A0	22	15
G5710-100-000	22	12
G5711-100-000	27	40
G5712-100-0A0	25	1
G5713-100-000	25	23
G5714-100-0A0	25	20
G5716-100-000	25	19
G5717-100-000	22	5
G5718-100-000	25	15
G5721-100-0A0	25	10
G5722-100-000	25	11
G5723-100-000	25	12
G5751-100-000	28	11
G5754-100-00A	28	27
G5757-100-0A0	36	22
G5758-100-0A0	36	21
G5759-100-0A0	36	20
G5760-100-0A0	36	19
G5775-100-000	28	28
G6001-122-0AB	28	2
G6001-122-0AC	28	3
G6001-122-0A0	28	1
G6002-122-0A0	34	1
G6003-122-0A0	35	1
G6004-122-00A	28	32
G6004-122-009	28	33
G6057-122-0A0	36	27
G6058-122-0A0	36	28
G6059-122-0A0	36	23
G6061-122-000	30	35
G6062-122-000	30	29
G6063-122-000	30	33
G6064-122-000	30	31
G6065-122-000	30	30
G6066-122-000	30	34
G6067-122-000	30	36
G6068-122-000	30	32
G6069-122-000	30	25
G6070-122-000	30	27
G6071-122-000	30	28
G6075-122-000	35	6
G6101-122-0A0	28	16
G6102-122-0A0	36	2
G6103-122-0A0	36	1
G6104-122-080	36	24

Part No. 品番	Page 頁	Ref. No.
G6106-122-0AC	36	13
G6107-122-0A0	36	26
G6108-122-0A0	36	25
G6109-122-0A0	36	29
G6110-122-0A0	36	14
G6111-122-0AC	36	30
G6112-122-0A0	36	11
G6113-122-0A0	36	16
G6114-122-0A0	36	15
G6115-122-0A0	36	17
G6116-122-0AC	36	4
G6117-122-0A0	36	5
G6120-122-0A0	36	6
G6121-122-0A0	36	10
G6122-122-0A0	36	7
G6123-122-0A0	36	9
G6124-122-0A0	36	8
G6125-122-0A0	36	3
G6126-122-0A0	36	18
G6127-122-0A0	36	12
G6169-122-000	30	56
G6211-122-080	35	19
G9130-122-000	38	25
G9131-122-000	38	14
G9132-122-000	38	24
G9133-122-000	38	27
G9134-122-0A0	38	10
G9135-122-000	38	31
G9136-122-000	38	32
G9137-122-000	38	33
G9138-122-000	38	37
G9139-122-000	38	30
G9140-122-000	38	41
G9141-122-000	38	13
G9142-122-000	38	1
HA-0000700-00	30	55
HA-0008900-00	34	23
HA-0009100-10	30	24
HA-0009200-10	30	26
HA-0009500-00	30	22
HA-0009500-00	30	23
HA-0011200-00	19	9
HCL-500810S1	35	4
HCM-250C01S1	34	34
HCM-250C01S1	35	25
HC-0002200-00	34	30
HC-0005800-00	34	35
HC-0011400-00	34	32
HC-0011900-00	34	36
HC-0012200-00	34	37
HC-0012200-00	35	5
HC-0016800-00	35	18
HC-0016900-00	35	15
HC-0035800-00	34	31
HC-0040900-00	35	28
HC-0079033-P0	34	33
HC-0081110-20	35	22
HG-0002800-00	35	2
HG-0015900-00	34	28
HG-0026900-00	35	34
HG-0027300-00	34	29
HG-0027400-00	34	27
HG-0027500-00	35	14
HG-0027600-00	35	17
HG-0027700-00	35	35
HG-0027800-00	35	11
HK-0186200-9B	28	6
HK-0186201-2B	28	7
HK-0186201-2C	28	14
HK-0194000-60	35	16
HK-0194000-80	35	3
HK-0211000-30	34	54
HK-0211000-60	34	53
HK-0211000-70	34	52
HK-0211000-70	35	26
HK-0211000-80	34	51
HK-0216001-30	35	31
HL-0000500-00	34	17

Part No. 品番	Page 頁	Ref. No.
HL-0012200-00	34	18
HL-0012500-00	34	19
HL-0012800-00	34	2
HL-0012800-00	35	23
HL-0013600-00	34	10
HL-0014400-00	34	7
HL-0016100-00	35	7
HL-0023800-74	34	9
HL-0023800-75	34	55
HL-0025700-00	34	8
HL-0028600-00	34	5
HL-0031500-00	34	15
HL-0033600-00	34	6
HL-0034300-00	34	4
HL-0034900-00	34	3
HL-0036200-00	34	14
HL-0058700-00	34	13
HL-0062100-00	35	32
HL-0062200-00	35	29
HL-0062300-00	35	27
HL-0062400-00	34	11
HL-0062500-00	34	22
HL-0062600-00	34	12
HL-0062700-00	35	8
HR-0017010-10	34	40
HR-0017010-10	35	9
HR-0017010-10	35	21
HR-0017010-20	34	41
HR-0017010-30	34	44
HR-0017010-40	34	47
HR-0017015-20	34	45
HR-0017022-20	34	49
HR-0017027-10	34	48
HR-0017033-10	34	46
HR-0017033-10	35	33
HR-0017047-10	34	42
HR-0017047-10	35	20
HR-0017047-30	35	24
HR-0017068-00	35	30
HR-0017082-10	34	43
HR-0132033-20	34	38
HR-0185012-P0	35	10
HR-0186015-10	35	12
HT-0002400-00	34	24
HT-0024200-00	34	25
HT-0024300-00	34	26
HT-0024400-00	34	16
HX-0002300-00	30	5
HX-0011900-00	34	21
HY-0000500-00	34	20
MAT-80143T00	28	23
MAT-80143T00	38	43
MAT-81151T00	28	29
MAV-02171000	34	50
MAV-02171000	35	13
MC-2005012-0T	6	49
MC-2005012-0T	38	17
MDP-1708190T	6	47
MDP-1708190T	38	16
MDP-1706210T	6	48
MDP-1708210T	38	18
MTS-NJ5030AS	32	4
MTS-NJ5000AT	32	5
MTS-NJ500001	32	31
MTS-NJ500002	32	32
MTS-NJ500003	6	65
NM-6040001-SC	14	24
NM-6050550-SD	40	6
NM-6050550-SD	40	29
NM-6060001-SC	4	26
NM-6060001-SC	12	3
NM-6060001-SC	28	12
NM-6060001-SC	30	40
NM-6080001-SC	30	45
NS-6060350-SP	18	54
NS-6090310-SP	27	8

Part No. 品番	Page 頁	Ref. No.
NS-6110350-SP	30	8
NS-6110420-SP	8	49
NS-6110420-SP	8	55
NS-6361040-SP	10	8
NS-6660511-SP	10	13
NS-6660511-SP	10	44
PA-3201001-00	40	1
PC-0105010-00	32	20
PC-0105020-00	32	1
PF-0252010-A0	30	61
PF-0252010-00	30	64
PF-0252020-AC	32	13
PF-0353010-00	30	65
PF-0652020-00	30	63
PF-9010010-00	30	62
PJ-3010405-01	16	35
PJ-3010405-01	32	2
PJ-3080400-01	16	2
PJ-3080400-01	32	9
PJ-3080400-01	42	3
PS-0160122-KH	29	39
PS-0160122-KH	26	36
PS-0200122-KH	2	22
PS-0200142-K0	21	25
PS-0300102-K0	26	12
PS-0300102-K0	42	9
PS-0300201-KP	27	30
PS-0300242-K0	20	27
PS-0300242-K0	21	11
PS-0400182-K0	30	41
PS-0500102-KH	20	13
PV-1305010-A0	32	19
PV-1505020-A0	32	15
RC-1700002-KP	24	41
RE-0300000-K0	16	49
RE-0300000-K0	18	61
RE-0300000-K0	27	32
RE-0400000-K0	24	53
RE-0400000-K0	26	24
RE-0500000-K0	21	19
RE-0500000-K0	22	26
RE-0500000-K0	26	45
RE-0700000-K0	10	51
RE-0700000-K0	10	62
RO-0091801-00	8	3
RO-1482402-00	8	9
SD-0470201-SP	18	7
SD-0490261-SP	19	30
SD-0640322-TP	8	32
SK-3312000-S0	32	7
SK-3482500-SC	19	7
SM-4030501-SC	28	4
SM-4030601-SN	28	30
SM-4031601-SC	28	17
SM-4061601-SC	2	11
SM-4061601-SC	22	22
SM-4261601-SC	27	26
SM-4261601-SC	30	2
SM-4861601-SC	42	18
SM-6041002-TP	16	37
SM-6041012-TP	12	57
SM-6041402-TN	16	4
SM-6041402-TN	16	21
SM-6041402-TN	38	29
SM-6041402-TN	40	38
SM-6042002-SP	18	59
SM-6044052-TP	25	21
SM-6051002-SP	14	12
SM-6051002-SP	14	26
SM-6051002-SP	32	28
SM-6051002-SP	32	30
SM-6051002-SP	32	34
SM-6051202-SP	4	32
SM-6051202-SP	12	60

Part No. 品号	Page 頁	Ref. No.
SS-[illegible]	2	7
SS-[illegible]	4	12
SS-[illegible]	4	23
SS-[illegible]	18	34
SS-[illegible]	18	39
SS-[illegible]	18	66
SS-[illegible]	4	37
SS-[illegible]	12	30
SS-[illegible]	12	41
SS-[illegible]	2	49
SS-[illegible]	6	44
SS-[illegible]	3	46
SS-[illegible]	10	7
SS-[illegible]	10	58
SS-[illegible]	18	5
SS-[illegible]	16	17
SS-[illegible]	16	18
SS-[illegible]	18	22
SS-[illegible]	18	4
SS-[illegible]	18	22
SS-[illegible]	21	10
SS-[illegible]	21	15
SS-[illegible]	22	19
SS-[illegible]	23	16
SS-[illegible]	25	22
SS-[illegible]	26	26
SS-[illegible]	27	9
SS-[illegible]	27	20
SS-[illegible]	40	43
SS-[illegible]	42	26
SS-[illegible]	42	32
SS-[illegible]	18	11
SS-[illegible]	27	31
SS-[illegible]	10	19
SS-[illegible]	14	9
SS-[illegible]	16	43
SS-[illegible]	16	14
SS-[illegible]	24	1
SS-[illegible]	40	23
SS-[illegible]	40	35
SS-[illegible]	4	16
SS-[illegible]	16	6
SS-[illegible]	16	28
SS-[illegible]	16	57
SS-[illegible]	8	42
SS-[illegible]	40	45
SS-[illegible]	42	41
SS-[illegible]	18	16
SS-[illegible]	2	9
SS-[illegible]	2	36
SS-[illegible]	2	7
SS-[illegible]	2	26
SS-[illegible]	2	46
SS-[illegible]	2	58
SS-[illegible]	6	14
SS-[illegible]	20	56
SS-[illegible]	12	47
SS-[illegible]	12	63
SS-[illegible]	14	38
SS-[illegible]	20	1
SS-[illegible]	21	3
SS-[illegible]	21	29
SS-[illegible]	27	37
SS-[illegible]	22	24
SS-[illegible]	24	55
SS-[illegible]	26	34
SS-[illegible]	30	15
SS-[illegible]	40	47
SS-[illegible]	42	20
SS-[illegible]	20	25
SS-[illegible]	8	53
SS-[illegible]	8	63
SS-[illegible]	19	29
SS-[illegible]	4	38
SS-[illegible]	19	6
SS-[illegible]	19	11
SS-[illegible]	22	6
SS-[illegible]	24	13
SS-[illegible]	25	6
SS-[illegible]	26	29

Part No. 品号	Page 頁	Ref. No.
SS-7090510-SL	30	6
SS-7090510-SL	30	10
SS-7090510-SL	30	14
SS-7090510-SL	40	16
SS-7090520-SP	18	14
SS-7090710-SL	2	30
SS-7090710-SL	2	33
SS-7090710-SL	4	2
SS-7090710-SL	4	7
SS-7090710-SL	10	59
SS-7090710-SL	12	24
SS-7090710-SL	14	13
SS-7090710-SL	14	18
SS-7090710-SL	14	22
SS-7090710-SL	14	28
SS-7090710-SL	16	51
SS-7090710-SL	18	3
SS-7090710-SL	18	52
SS-7090710-SL	18	58
SS-7090710-SL	18	70
SS-7090710-SL	19	4
SS-7090710-SL	20	20
SS-7090710-SL	21	22
SS-7090710-SL	21	41
SS-7090710-SL	22	1
SS-7090710-SL	22	2
SS-7090710-SL	24	39
SS-7090710-SL	25	2
SS-7090710-SL	27	18
SS-7090710-SL	30	20
SS-7090710-SL	40	8
SS-7090710-SL	40	30
SS-7090920-SP	27	10
SS-7091610-SP	16	59
SS-7110410-SN	19	26
SS-7110820-SN	19	16
SS-7110820-SN	19	21
SS-7110840-SP	21	16
SS-7110840-SP	24	19
SS-7110840-SP	40	26
SS-7110910-SP	40	14
SS-7111120-SP	10	64
SS-7111120-SP	26	22
SS-7111410-SP	2	27
SS-7111410-SP	4	5
SS-7111410-SP	6	28
SS-7111410-SP	6	56
SS-7111410-SP	10	12
SS-7111410-SP	12	66
SS-7111410-SP	14	31
SS-7111410-SP	14	40
SS-7111410-SP	14	42
SS-7111410-SP	20	12
SS-7111410-SP	24	24
SS-7111410-SP	26	42
SS-7111410-SP	42	21
SS-7150740-SP	10	20
SS-7661110-TW	8	36
SS-7681750-TP	6	5
SS-8080410-SP	18	32
SS-8080610-SP	18	31
SS-8090410-SP	8	27
SS-8090710-SP	24	18
SS-8110310-SP	40	50
SS-8110510-SN	19	23
SS-8150510-SP	2	38
SS-8150510-SP	2	44
SS-8150510-SP	6	39
SS-8150510-SP	10	55
SS-8150510-SP	12	13
SS-8150510-SP	12	50
SS-8150510-SP	21	24
SS-8150810-SP	2	55
SS-8150810-SP	6	12
SS-8150810-SP	6	38
SS-8150810-SP	8	17
SS-8150810-SP	8	21
SS-8150810-SP	10	22
SS-8150810-SP	12	15
SS-8150810-SP	12	17

Part No. 品号	Page 頁	Ref No
SS-8150810-SP	12	45
SS-8150810-SP	14	5
SS-8150810-SP	14	17
SS-8150810-SP	14	30
SS-8150810-SP	21	27
SS-8150810-SP	26	46
SS-8151150-SP	6	61
SS-8151150-SP	8	56
SS-8151230-SP	8	57
SS-8151350-SP	2	54
SS-8151350-SP	8	10
SS-8151550-SP	26	18
SS-8151730-SP	8	19
SS-8660530-SP	8	14
SS-8660670-SP	8	15
SS-8660830-TP	8	12
SS-8680540-SP	6	6
SS-8680730-SP	6	7
SS-8681650-TP	6	4
SS-9111010-SP	6	51
SS-9111510-SP	30	7
WP-0320501-SC	28	5
WP-0320501-SC	28	18
WP-0320501-SC	28	31
WP-0350516-NZ	40	24
WP-0371016-SD	8	43
WP-0430801-SC	16	33
WP-0430801-SC	19	5
WP-0430801-SC	19	12
WP-0450801-SD	2	15
WP-0450801-SD	12	25
WP-0450801-SD	12	64
WP-0450801-SD	14	39
WP-0450801-SD	21	23
WP-0450801-SD	21	36
WP-0450801-SD	24	14
WP-0450801-SD	24	50
WP-0450801-SD	40	9
WP-0450801-SD	40	17
WP-0501016-SC	19	8
WP-0501016-SC	19	15
WP-0501016-SC	40	3
WP-0651001-SB	4	34
WP-0651001-SB	8	53
WP-0651001-SB	10	30
WP-0651001-SB	10	33
WP-0651001-SB	12	5
WP-0651001-SB	22	14
WP-0651001-SB	26	10
WP-0651001-SB	32	12
WP-0651001-SB	32	37
WP-0651001-SB	40	41
WP-0841601-SC	6	23
WP-0851846-SC	10	25
WP-0851846-SC	30	43
WS-0310002-KN	28	19
WS-0631510-KP	30	39
WS-0822010-KP	30	44
101-23650	33	19