JACK 杰克

快速服务100%

零件手册

Parts Manual

A6F 系列 A6F Series

1

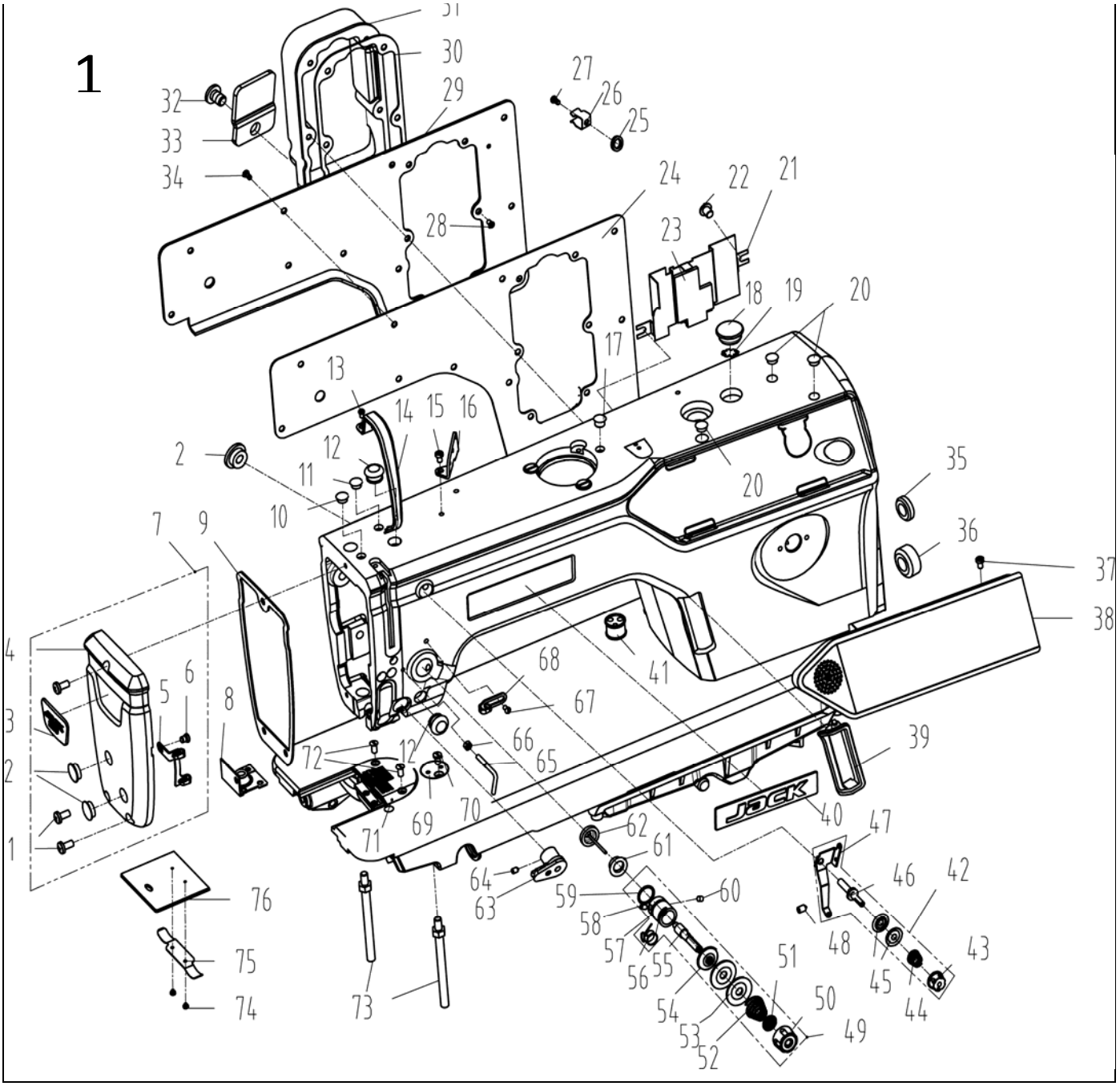
31
30
29
32
33
34
27
26
25
24
22
21
28
23
18
19
20
17
13
14
15
16
12
2
11
10
20
35
36
37
38
7
9
4
6
5
8
3
2
1
68
41
67
66
65
72
12
39
70
69
71
40
47
62
61
64
63
59
60
46
42
58
57
56
55
48
43
45
44
51
50
54
53
52
49
76
75
74
73

1. 机壳、外装部件/Machine Frame & Miscellaneous Cover Components

序号NO.	公司件号 Part NO.	名称 PartName	零件描述 Description	数量 Number	
1	101S11001	后窗板螺钉	Screw SM3/16"×28 L=9	3	3
2	10122003	面板调节孔螺塞	Rubber plug	2	2
3	14437001	面板商标牌	Head card	1	1
4	14401005	面板	Face plate	1	1
5	13813005	左线钩	Thread guide left	1	1
6	101S11007	右线勾螺钉	Screw SM11/64"x40 L=6	1	1
7	303979	面板(喷漆)	Face plate asm	1	1
8	14422001	针杆油封套	Needle bar oil seal set	1	1
9	14422004	面板垫	Face plate gasket	1	1
10	13122003	针杆孔塞	Rubber plug	1	1
11	10122005	挑线连杆销螺孔塞	Rubber plug	1	1
12	10122004	针杆曲柄螺孔塞	Rubber plug	3	3
13	101S11004	挑线杆护罩螺钉SM3/16"×28 L=7	Screw SM3/16"×28 L=7	1	1
14	13812018	挑线杆防护罩	Thread take-up lever cover	1	1
15	101S11004	挑线杆护罩螺钉SM3/16"×28 L=7	Screw SM3/16"×28 L=7	1	1
16	13512004	三孔线勾	3-hole thread guide	1	1
17	10122005	挑线连杆销螺孔塞	Rubber plug	1	1
18	21022007	油塞	Rubber plug	1	1
19	21012018	油封垫	Oil sealing washer	1	1
20	13822001	操作屏孔塞	Rubber plug	3	3
21	14412021	隔油板	Oil preventing plate	1	1
22	101S11033	油管压板螺钉	Screw SM3/16"x28 L=5.8	2	2
23	14423002	隔油板油棉	Oil cotton	1	1
24	14422005	后窗板垫	Side plate gasket	1	1
25	10128016	螺纹销橡胶垫圈(薄)	Washer	1	1
26	13812007	卡簧	Buckle	1	1
27	S04021	螺钉	Screw	1	1
28	101S11001	后窗板螺钉SM3/16"×28 L=9	Screw SM3/16"×28 L=9	6	6
29	303978	后窗板(喷漆)	Side plate	1	1
30	14422002	抬压脚电磁铁盖板垫	Flat pad	1	1
31	303980	抬压脚电磁铁盖板(喷漆)	Presser foot electromagnet cover plate	1	1
32	14412022	电线压板		1	1
33	101S11033	油管压板螺钉		1	1
34	101S11001	后窗板螺钉SM3/16"×28 L=9	Screw SM3/16"×28 L=9	12	12
35	10122006	送料调节器孔塞	Rubber plug	1	1
36	10122007	下轴工艺孔塞	Rubber plug	1	1
37	138S05001	操作面板螺钉	Screw	2	2
38	14430021	操作面板组件(鲍麦克斯)（鼓包）	Control panel,qixing	1	1
39	14422007	装饰条	Decorative article	1	1
40	14437002	机头商标牌	Head card	1	1
41	14122001	橡皮塞(四孔)	Rubber plug	1	1
42	1411300400	小夹线器组件	Thread tension asm.	1	1
43	141S16019	小夹线器螺母	Thread tension nut	1	1
44	11227001	小夹线弹簧	Thread tension spring	1	1
45	14112017	小夹线板	Thread tension disk	2	2
46	13810008	小夹线器螺柱	Thread tension post	1	1
47	13812066	过线板	Thread tension guide plate	1	1
48	138S08006	小夹线器固定螺钉SM3/16"×28 L=7	Screw SM3/16"×28 L=7	1	1
49	1411300300	夹线器组件(精密)	Thread tension asm.	1	1
50	141S16013	夹线器螺母	Thread tension nut	1	1
51	10112007	夹线制动板	Thread disk rotating stopper	1	1
52	10127002	夹线弹簧	Thread tension spring A	1	1
53	14112015	夹线板	Thread tension disk	2	2
54	14112016	松线板	Disk stopper	1	1
55	141S30001	夹线螺钉	Thread tension post	1	1
56	10127001	挑线簧	Thread take-up spring	1	1
57	10103011	挑线簧调节座	Thread tension base	1	1
58	101S15005	夹线螺钉紧固螺钉SM9/64"x40 L=5.5	Screw SM9/64"x40 L=5.5	1	1
59	10122014	挑线簧调节座O型圈	Rubber ring	1	1
60	101S15006	夹线器螺钉	Screw SM15/64"x28 L=7	1	1
61	14403003	松线钉支撑套	Loose wire nail support sleeve	1	1
62	1442600300	松线钉组件	Loose wire nail asm.	1	1
63	1443000100	电子夹线器组件	Nest less e-device	1	1

64	S10008	GB/T80 凹端紧定螺钉 M4×6	Screw M4X6	1	1
65	13113001	固定式缓线钩	Thread guide	1	1
66	401S16001	螺母SM9/64"x40	Nut SM9/64"x40	1	1
67	101S11007	右线勾螺钉	Screw SM11/64"x40 L=6	1	1
68	10113004	右线勾	Thread guide right	1	1
69	13812019	卷边器座	Ruler stop seat	1	1
70	138S11002	卷边器座螺钉	Screw SM11/64"x40 L=5.5	1	1
71	13115001	针板	Needle plate	1	1
72	104S17002	针板螺钉	Screw SM11/64"x40	2	2
73	140S12001	底板支柱	Machine head stud	2	2
74	101S11019	推板簧螺钉	Slide plate	2	2
75	10127009	推板簧	Slide plate spring	1	1
76	10115002	推板	Screw SM3/32"x56 L=2	1	1

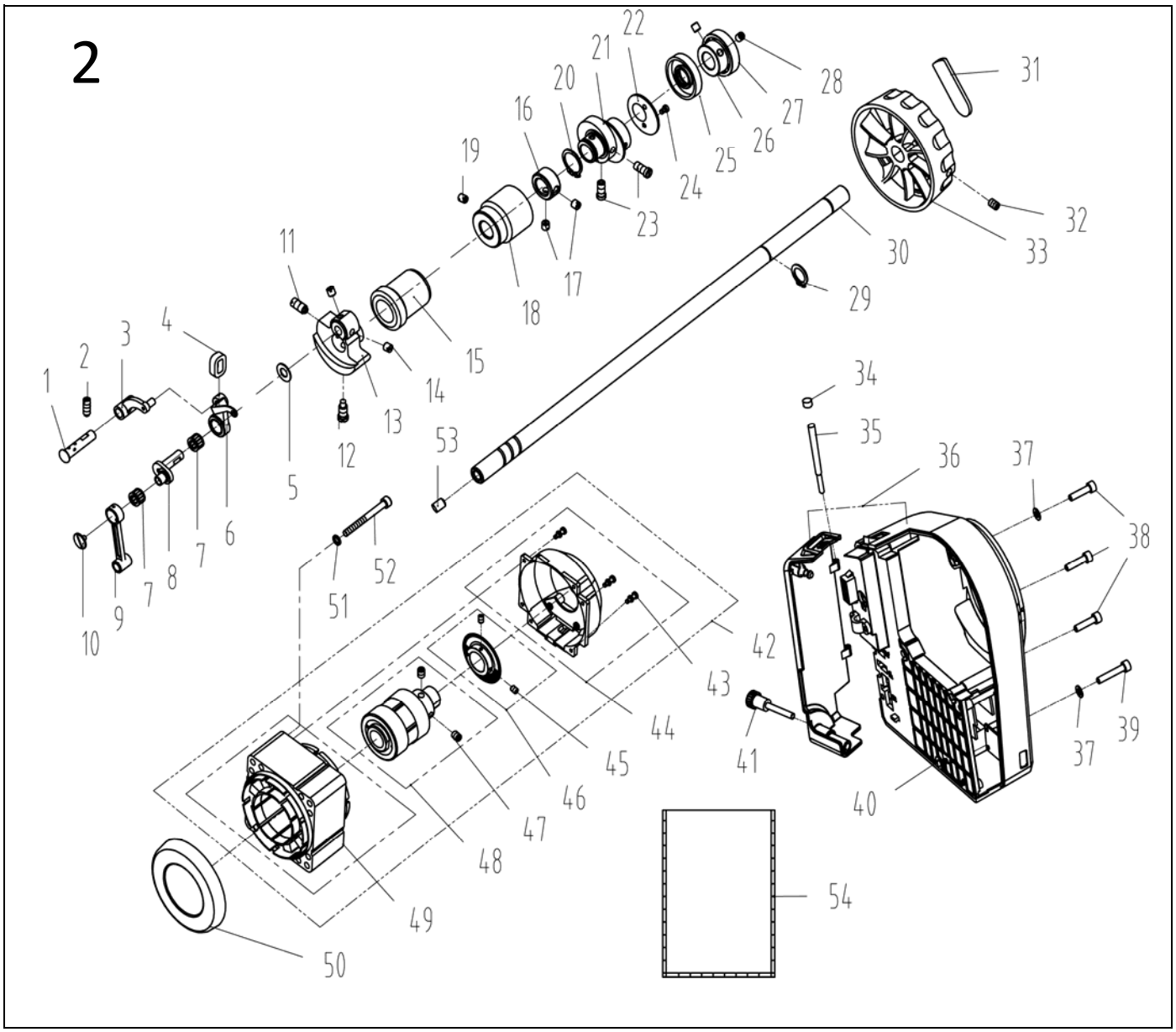
2
1
2
3
4
5
6
7
7
8
9
10
11
12
13
14
15
16
17
18
19
20
21
22
23
24
25
26
27
28
29
30
31
32
33
34
35
36
37
37
38
39
40
41
42
43
44
45
46
47
48
49
50
51
52
53
54

2. 上轴、挑线部件/Main Shaft & Thread Take-up Components

序号NO.	公司件号 Part NO.	名称 PartName	零件描述 Description	数量 Number	
1	12226001	挑线连杆销	Thread take-up connecting rod pin	1	1
2	101S15001	上轮螺钉	Screw SM15/64"x28 L=15	1	1
3	11305010	挑线连杆	Thread take-up connecting rod	1	1
4	14422008	挑线杆断油橡胶	Thread take-up lever rubber	1	1
5	10112003	针杆曲柄护板	Needle bar crank protecting plate	1	1
6	1013800100	挑线杆分组件	Thread take-up lever asm.	1	1
7	10124001	挑线杆滚针轴承	Needle bearing	2	2
8	11310012	挑线曲柄分部件	Thread take-up crank	1	1
9	10105002	针杆连杆	Needle bar connecting rod	1	1
10	101S17001	挑线曲柄螺钉（左旋）	Screw	1	1
11	101S15004	针杆曲柄紧固螺钉 SM9/32"x28 L=16	Screw SM9/32"x28 L=16	1	1
12	101S11003	针杆曲柄定位螺钉SM9/32"x28 L=16	Screw SM9/32"x28 L=16	1	1
13	10404001	针杆曲柄	Needle bar crank	1	1
14	101S15002	送料轴挡圈螺钉SM1/4"x40 L=6	Screw SM1/4"x40 L=6	2	2
15	1440300200	上轴前轴套组件	Main shaft bushing front	1	1
16	10108001	上轴挡圈	Main shaft thrust collar	1	1
17	101S14001	上轴中套挡圈螺钉SM1/4"x40 L=6	Screw SM1/4"x40 L=8	2	2
18	14403001	上轴中轴套	Main shaft bushing mid	1	1
19	138S08006	小夹线器螺钉SM3/16"x28 L=7	Screw SM3/16"x28 L=7	1	1
20	H03002	挡圈20	Snap ring 20	1	1
21	11310014	送料偏心轮	Feed eccentric cam	1	1
22	10112017	送料偏心轮盖板	Cover plate	1	1
23	101S11013	送料偏心轮螺钉 SM1/4"x40 L=13	Screw SM1/4"x40 L=13	2	2
24	113S11003	护针片螺钉 SM9/64"x40 L=5	Screw SM9/64"x40 L=5	2	2
25	14422009	上轴后油封	Oil seal	1	1
26	14403008	上轴轴承套	Bearing bush	1	1
27	B06023	GB/T276-2013 轴承61904-2RS	Needle bearing	1	1
28	S10018	GB/ T80 凹端紧定螺钉 M6×0.75×6	Screw M6×0.75×6	2	2
29	H03001	GB/T894.1-1986挡圈15	Snap ring 15	1	1
30	14402001	上轴	Main shaft	1	1
31	13811021	手轮贴条	Handwheel lable	1	1
32	S10009	螺钉	Screw	2	2
33	302830	手轮（喷漆）	Handwheel	1	1
34	12922015	橡皮塞	Rubber plug	1	1
35	13826009	罩壳台阶销	Pin	1	1
36	1441103000	一体机电控罩壳组件（鲍麦克斯）	Electronic control box	1	1
37	W01009	GB/T97.1-1985垫圈 5	Washer 5	2	2
38	114S13001	直驱电机螺钉M5×20	Screw M5×20	3	3
39	114S30001	螺栓(内六角)M5×25	Screw M5×25	1	1
40	14133002	一体机电控组件（鲍麦克斯）	Electronic control box	1	1
41	144S30001	电控后侧盖螺钉	Screw	1	1
42	13833050	光电伺服电机（鲍麦克斯）	Servo motor	1	1
43	GB/T9074.8	复合槽小盘头螺钉组合件M3×8	Screw	5	5
44	1383300700	电机罩壳组件(配鲍麦)	Encoder housing assembly	1	1
45	GB/T80-2007	内六角凹端紧定螺钉M3×4	Screw M3×4	1	1
46	1383300900	电机光栅组件（配鲍麦）	Motor grating sensor asm	1	1
47	GB/T77-2000	内六角平端紧定螺钉M6×6	Screw M6×6	1	1
48	1383300400	电机转子总成	Motor rotor	1	1
49	13833003	电机定子总成(配鲍麦)	Motor stator,qixing	1	1
50	13811060	绝缘防护罩	Insulating shield	1	1
51	GB/T93-1987	弹垫5	Spring washer 5	4	4
52	GB/T70.1 -2000	内六角圆柱头螺钉M5×50 8.8级	Screw M5×50	4	4
53	10122012	上轴孔塞	Rubber plug	1	1
54	13831015	塑料袋28×18(cm)厚0.03mm	Plastic bag 28cmx18cmx0.3mm	1	1

3

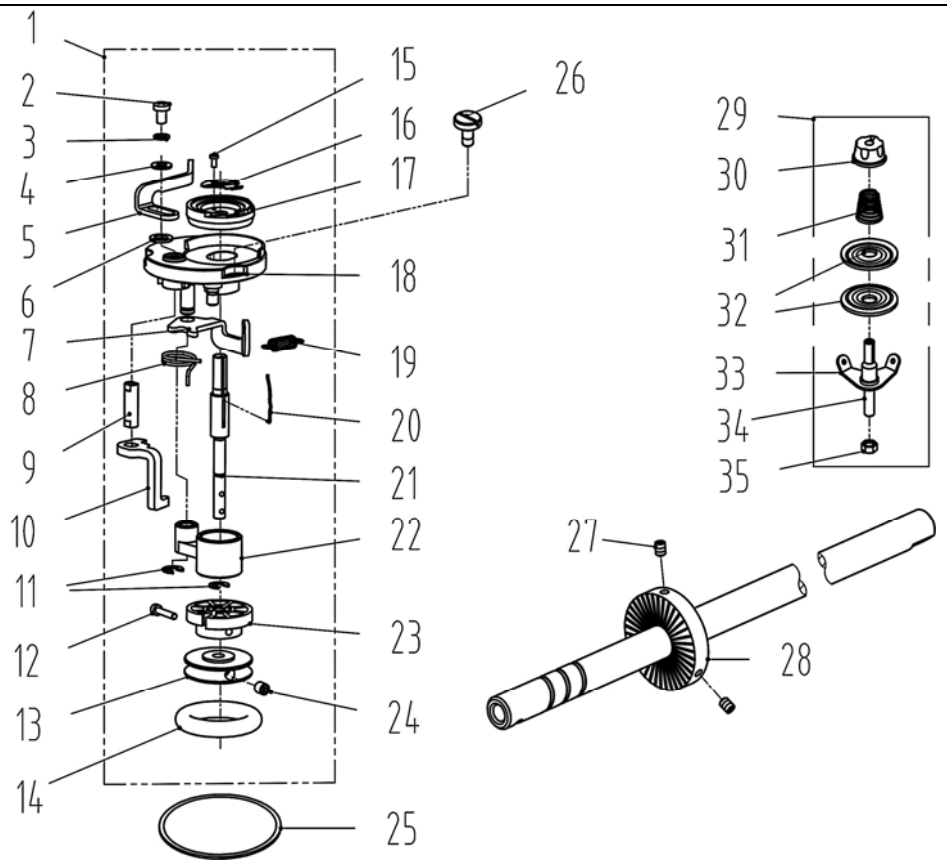
1
2
3
4
5
6
7
8
9
10
11
12
13
14
15
16
17
18
19
20
21
22
23
24
25
26
27
28
29
30
31
32
33
34
35

3. 绕线部件/ Bobbin Components

序号NO.	公司件号 Part NO.	名称 PartName	零件描述 Description	数量 Number	
1	1413104900	绕线器组件	Bobbin winder asm.	1	1
2	S05300	GB/T 70.1-2008螺钉M4x6	Screw M4x6	1	1
3	W02015	GB/T93-1987 垫圈	Washer	1	1
4	W01008	垫圈4	Washer	1	1
5	14113002	压线控制板	Pressure line control board	1	1
6	14112020	垫圈	Washer	1	1
7	13812110	调节板	Regulating plate	1	1
8	13827013	满线复位簧	Reset spring	1	1
9	14102005	绕线凸轮轴	Winding camshaft	1	1
10	14111005	绕线凸轮板	Winding cam plate	1	1
11	11329020	开口挡圈5	Ring 5	1	1
12	141S13001	内六角圆柱头螺钉SM9/64"×40 L=16	Screw SM9/64"×40 L=16	1	1
13	14111004	绕线轮	Winding wheel	1	1
14	O01110	O型圈25x7	O ring 25x7	1	1
15	S04090	GB/T 818-2000螺钉M2x4	Screw M2x4	1	1
16	14119003	割线刀	Secant cutter	1	1
17	14111002	绕线衬垫	Winding gasket	1	1
18	14131001	绕线器装置主座	The main seat	1	1
19	10127061	复位板拉簧	Drag spring	2	2
20	14127060	弹簧	Spring	1	1
21	14102003	绕线器主轴	principal axis	1	1
22	1380510600	绕线器连杆组件	Bobbin connecting rod asm	1	1
23	14111006	止动轮	Driven wheel	1	1
24	S09103	绕线轮螺钉	Screw M4x4	2	2
25	11422062	密封垫	Washer	1	1
26	114S11003	螺钉SM3/16"×28 L=10	Screw SM3/16"×28 L=10	3	3
27	S10009	螺钉M6×8	Screw M6×8	2	2
28	11435013	绕线器驱动轮	Driving wheel	1	1
29	1411300600	底线夹线器	Bobbin thread tension asm.	1	1
30	141S16019	小夹线器螺母	Thread tension nut	1	1
31	11427006	小夹线弹簧	Spring	1	2
32	14112015	夹线板	Thread tension disk	2	1
33	11413022	夹线过线板	Thread tension guide plate	1	1
34	112S13004	夹线螺钉	Screw	1	1
35	114S16001	螺母SM11/64"×40	Nut SM11/64"×40	1	1

4

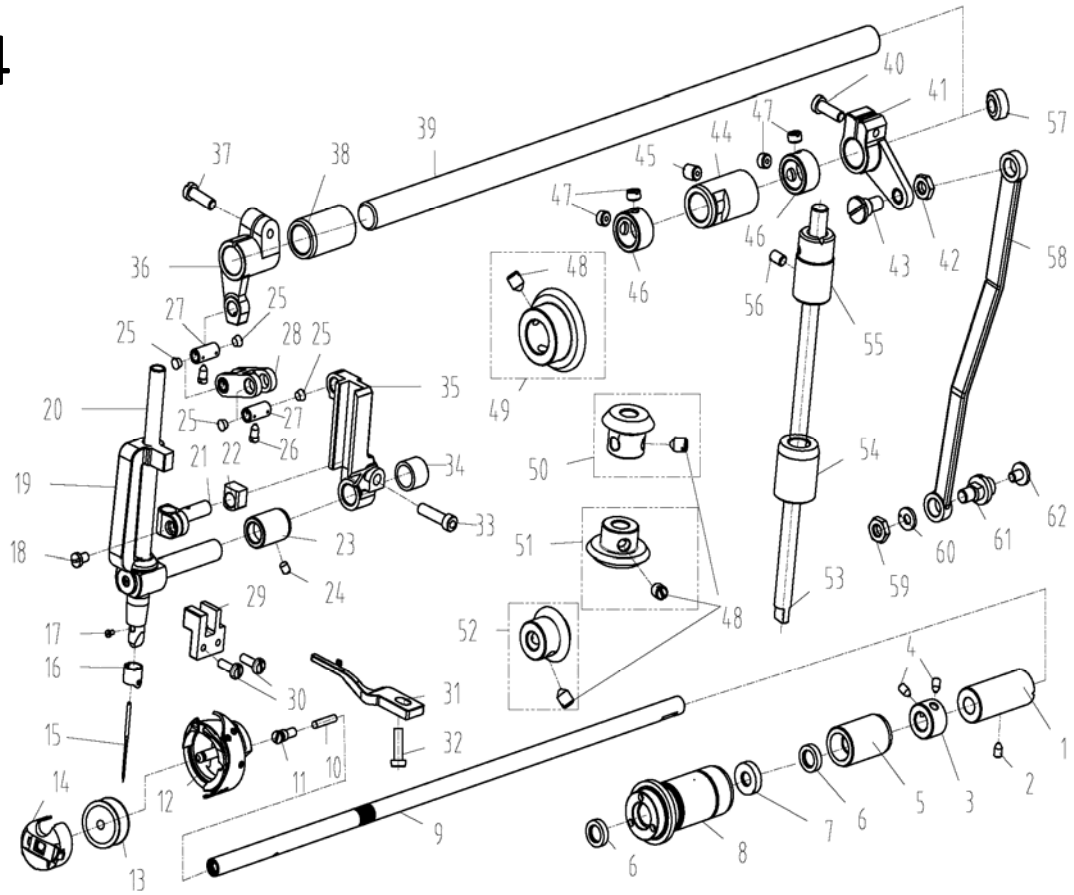
37
38
39
40
41
57
44
47
45
47
46
46
43
42
58
36
48
56
55
25
27
25
28
25
35
49
20
25
27
26
21
22
34
50
54
19
33
23
51
62
61
60
18
24
59
53
29
48
17
52
16
30
31
4
15
32
1
10
11
14
12
2
9
6
8
7
6
5
3
13

4. 针杆、竖轴、下轴部件/Needle bar,Upright Shaft & Hook Driving Shaft Components

序号NO.	公司件号 Part NO.	名称 PartName	零件描述 Description	数量 Number	
1	13803037	下轴后轴套	Hook driving shaft bushing back	1	1
2	113S14020	下轴后套螺钉SM11/64"×40 L=6	Screw SM11/64"×40 L=6	1	1
3	10108002	下轴挡圈	Hook driving shaft snap ring	1	1
4	101S11012	下轴挡圈螺钉 SM11/64"×40 L=4.8	Screw SM11/64"×40 L=4.8	2	2
5	14003004	下轴中套	Lower shaft middle bushing	1	1
6	11522001	油封组件12	oil seal 12	2	2
7	1142201600	油封组件18	oil seal 18	1	1
8	14103004	下轴前轴套组件	Lower shaft before bushing asm	1	1
9	14402003	下轴	Hook driving shaft	1	1
10	11423003	下轴限油芯	Oil wick	1	1
11	101S30025	下轴限油螺钉	set screw	1	1
12	11418003	广濑中厚料旋梭(扩大缝纫范围)	Hook asm（Hirose）	1	1
13	10118003	梭心	Bobbin	1	1
14	11218504	梭壳	Bobbin case asm.	1	1
15	10117001	机针（14#）	Needle	1	1
16	10113002	针杆线勾	Needle bar thread guide	1	1
17	104S11006	支针螺钉(进口) SM1/8"x44 L=4.5	Screw SM1/8"x44 L=4.5	1	1
18	101S11005	针杆连接柱螺钉 SM9/64"x40 L=6	Screw SM9/64"x40 L=6	1	1
19	1440100100	针杆支架组件	Needle bar support asm	1	1
20	14402012	针杆（DLC）	Needle bar	1	1
21	14438002	针杆连接柱（DLC）	Needle bar connecting rod	1	1
22	14409001	针杆连接柱滑块	Slide block	1	1
23	14403006	针杆支架轴套	Needle bar stand collar	1	1
24	138S08006	小夹线器螺钉SM3/16"x28 L=7	Screw SM3/16"x28 L=7	1	1
25	13111002	塞子	Plug	4	4
26	131S01004	螺钉 9/64×40 L=6	Screw 9/64×40 L=6	2	2
27	14426007	驱动连杆销（DLC）	Driving connecting rod pin	2	2
28	14405002	驱动连杆	Driving connecting rod	1	1
29	14409004	针杆支架导轨	Needle bar guide	1	1
30	101S11010	压脚扳手螺钉	Presser foot screws	2	2
31	10112016	旋梭定位钩	Finger postioner	1	1
32	116S11005	牙架曲柄螺钉 SM11/64"×40 L=13	Screw SM11/64"×40 L=13	1	1
33	144S13001	内六角圆柱头螺钉SM3/16"x28	Screw 3/16"×28	1	1
34	131B07001	滚针轴承	Needle bearing	1	1
35	14409003	滑块导轨	Sliding block guide rail	1	1
36	14404001	针送前驱动曲柄	Sent front drive the crank pin	1	1
37	101S11016	送料曲柄螺钉 SM3/16"×28 L=14	Screw 3/16"×28 L=14	1	1
38	14403004	针摆动轴前套	Before the needle swing axle sleeve	1	1
39	14402009	针杆摆动轴	Needle bar swing axle	1	1
40	101S11016	送料曲柄螺钉 SM3/16"×28 L=14	Screw 3/16"×28 L=14	1	1
41	14404002	针送后驱动曲柄	After driving the crank	1	1
42	131N01002	螺母	Nut	1	1
43	144S20005	针送后驱动曲柄轴位螺钉	fter needle to drive the crank shaft scre	1	1
44	14403005	针摆动轴后套	After the needle swing axle sleeve	1	1
45	138S08006	小夹线器固定螺钉	Screw	1	1
46	13108002	挡圈	Ring	2	2
47	135S15004	上轴紧圈螺钉	Screw of shaft clamping ring	4	4
48	101S15014	齿轮螺钉SM1/4"x40 L=7	Screw SM1/4"x40 L=7	8	8
49	10425004	上轴伞齿轮	Upper shaft bevel gear	1	1
50	10425003	竖轴上伞齿轮	Upper small bevel gear asm	1	1
51	10425002	竖轴下伞齿轮	lower large bevel gear asm	1	1
52	10425001	下轴伞齿轮	Hook drive shaft bevel gear	1	1
53	10102007	竖轴	Upright shaft	1	1
54	10403013	竖轴下轴套	Upright shaft bushing lower	1	1
55	11303020	竖轴上轴套	Upright shaft bushing upper	1	1
56	113S11036	一字开槽紧定螺钉	Screw	1	1
57	10122006	送料调节器孔塞	Rubber plug	1	1
58	14405001	针送连杆	Needle connecting rod	1	1
59	131N01002	螺母	Nut	1	1
60	40128013	垫圈6.2×13×1	Washer 6.2×13×1	1	1
61	144S20006	针送下驱动曲柄调节螺柱	Driving crank adjustment screw	1	1
62	144S01001	调节螺柱螺钉	Screw	1	1

5

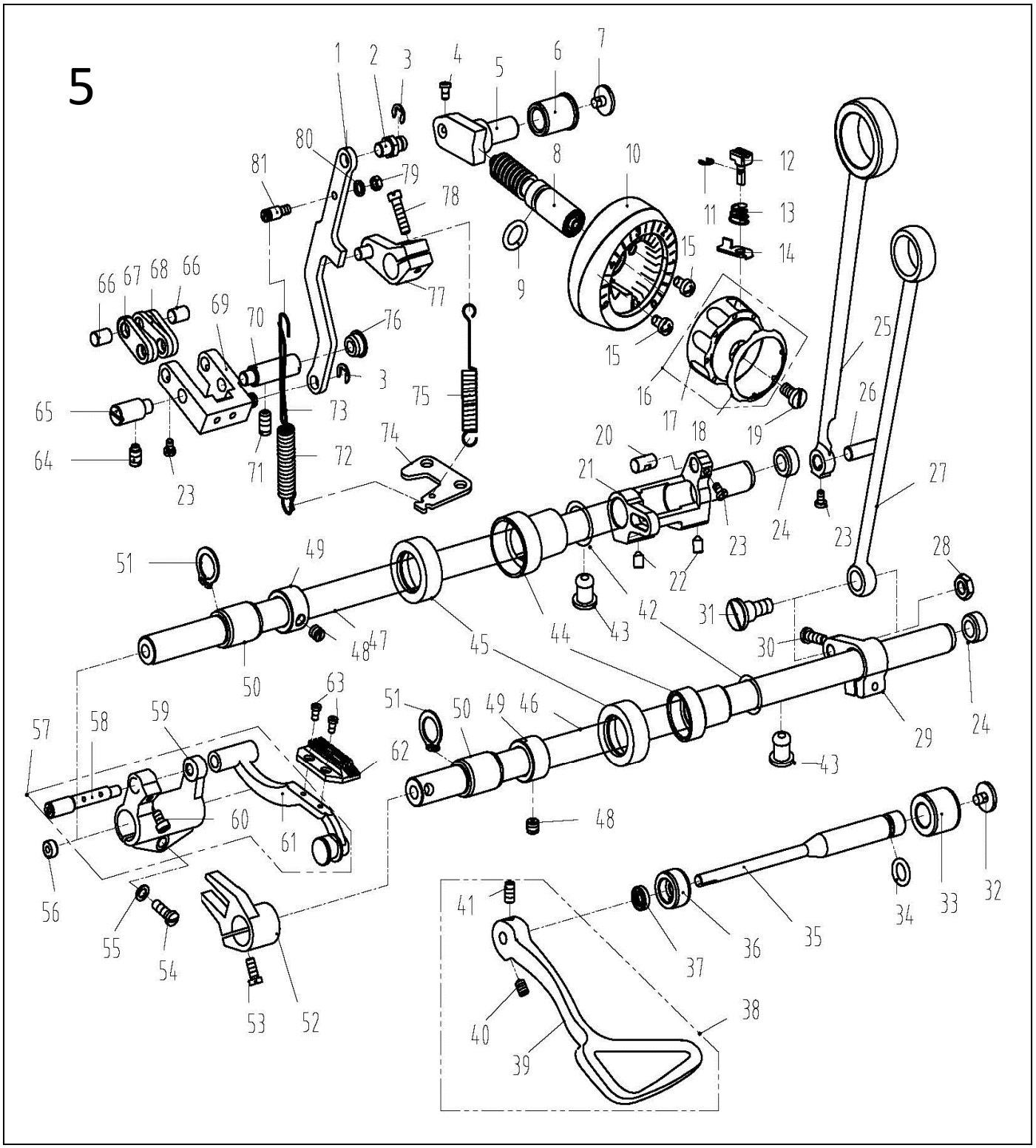
1
2
3
4
5
6
7
8
9
10
11
12
13
14
15
15
16
17
18
19
20
21
22
23
23
23
24
24
25
26
27
28
29
30
31
32
33
34
35
36
37
38
39
40
41
42
43
43
44
45
46
47
48
48
49
49
50
50
51
51
52
53
54
55
56
57
58
59
60
61
62
63
64
65
66
66
67
68
69
70
71
72
73
74
75
76
77
78
79
80
81

5. 送料部件 /Feed Mechanism Components

序号NO.	公司件号 Part NO.	名称 PartName	零件描述 Description	数量 Number	
1	11405015	倒送料连杆	Reverse feed connecting rod	1	1
2	11326011	倒送料连杆销	Connecting rod pin	1	1
3	11329020	挡圈5	Snap ring 5	2	2
4	101S11005	螺钉 SM9/64"x40 L=6	Screw SM9/64"x40 L=6	2	2
5	10101053	送料调节器	Feed regulator	1	1
6	11403043	送料调节器轴套	Feed regulator bushing	1	1
7	101S11023	送料调节器轴端螺钉SM3/16"x28 L=6.5	Screw SM3/16"x28 L=6.5	1	1
8	14426006	标盘螺柱	Feed regulator stud	1	1
9	10122016	送料调节螺钉O形圈	Rubber ring	1	1
10	14411004	固定表盘	Fixing dial plate	1	1
11	H05018	GB/T896-1986挡圈3.5	Snap ring 3.5	1	1
12	13811009	标盘按钮	Dial plate button	1	1
13	13827002	按钮复位簧	Spring	1	1
14	13812010	上限位片	Upper limit patch	1	1
15	101S11004	挑线杆护罩螺钉SM3/16"×28 L=7	Screw SM3/16"×28 L=7	2	2
16	1381100700	标盘旋钮组件	Dial knob asm	1	1
17	13811007	标盘旋钮	Dial knob	1	1
18	13811020	标盘旋钮盖板	Cover plate	1	1
19	101S11022	送料距旋钮螺钉SM3/16"x28 L=18	Screw SM3/16"x28 L=18	1	1
20	10126011	送料曲柄销	Feed rocker crank pin	1	1
21	14404004	针送下驱动曲柄（一体式）	Crank	1	1
22	144S14001	内六角凹端紧定螺钉SM9/32×28 L=8	Screw SM9/32×28 L=8	2	2
23	101S11005	螺钉 SM9/64"x40 L=6	Screw SM9/64"x40 L=6	4	4
24	12422001	橡皮塞15.5	Rubber plug 15.5	2	2
25	400083	送料连杆	Rocker shaft connecting rod	1	1
26	10126006	送料连杆销	Connecting rod pin	1	1
27	400093	抬牙连杆	Connecting rod	1	1
28	101S16003	抬牙连杆轴位螺母 SM9/32"x28	Hinge Screw SM9/32"x28	1	1
29	10104004	抬牙后曲柄	Feed driving shaft crank	1	1
30	101S11016	送料曲柄螺钉 SM3/16"x28 L=14	Screw SM3/16"x28 L=14	1	1
31	101S20005	抬牙连杆轴位螺钉 SM9/32"x28	Hinge Screw SM9/32"x28	1	1
32	101S11023	送料调节器轴端螺钉SM3/16"x28 L=6.5	Screw SM3/16"x28 L=6.5	1	1
33	13803021	倒送料轴后轴套	Reverse feed shaft bushing back	1	1
34	13822003	倒送料轴O形圈	Rubber ring	1	1
35	13802010	倒缝送料轴	Reverse feed shaft	1	1
36	13803020	倒送料轴中套	Reverse feed shaft bushing mid	1	1
37	13822056	倒送料轴中套油封	Mid bushing oil seal	1	1
38	302665	倒缝扳手（喷漆）	Reverse feed lever asm	1	1
39	13831055	倒缝扳手	Reverse feed lever	1	1
40	S10035	内六角凹端紧定螺钉M5X8	Screw M5X8	1	1
41	138S10010	内六角锥端紧定螺钉M5X8	Screw M5X8	1	1
42	O01039	GB/T 3452.1-1992O型圈Φ12.5xΦ1.8	O ring Φ12.5xΦ1.8	2	2
43	14022008	送料轴油线孔塞	Plug	2	2
44	14003002	送料轴后轴套	axle sleeve	2	2
45	1142200800	油封组件22	oil seal	2	2
46	14402007	抬牙轴	Feed driving shaft	1	1
47	14402008	送料轴	Feed rocker shaft	1	1
48	101S15002	送料轴挡圈螺钉SM1/4"x40 L=6	Screw SM1/4"x40 L=6	4	4
49	10108003	送料轴挡圈	Feed rocker shaft snap ring	2	2
50	10403015	轴套	Bushing	2	2
51	H03001	GB/T894.1-1986挡圈 15	Snap ring 15	2	2
52	10104003	抬牙叉形曲柄	Driving shaft crank	1	1
53	101S11020	抬牙叉形曲柄螺钉SM11/64"x40 L=10.5	Screw SM11/64"x40 L=10.5	1	1
54	101S11016	送料曲柄螺钉SM3/16"x28 L=14	Screw SM3/16"x28 L=14	1	1
55	10128003	牙架座螺钉垫圈	Washer	1	1
56	14022003	送料轴前孔塞	spout plug	1	1
57	400689	牙架组件(成品)	Feed bar asm	1	1
58	11226001	牙架销	Feed bar pin	1	1
59	11201001	牙架座	Feed bar bed	1	1
60	101S11025	复位板螺钉SM11/64"x40 L=7	Screw SM11/64"x40 L=7	1	1
61	470060	牙架部件	Feed bar	1	1
62	13114001	牙齿	Feed dog	1	1
63	101S11018	送料牙螺钉 SM1/8"x44 L=6	Screw SM1/8"x44 L=6	2	2

64	101S15010	左销螺钉 SM15/64"x28 L=10.5	Screw SM15/64"x28 L=10.5	1	1
65	10126009	送料摆动板座左销	Left pin	1	1
66	10126007	短摆动板连杆销	Connecting pin	2	2
67	13505024	送料短摆动板	Feed short shaking plate	2	2
68	10109004	送料长摆动板	Feed long shaking plate	2	2
69	1400100600	送料摆动板座分部件	Feed shaking plate bed components	1	1
70	10126010	送料摆动板座右销	Right pin	1	1
71	113S14010	右销螺钉SM15/64"x28 L=12	Screw SM15/64"x28 L=12	1	1
72	11427011	送料调节弹簧	Spring	1	1
73	11321005	油管	Tube	0.11	0.11
74	13812081	拉簧固定板	Fixed plate	1	1
75	13827006	倒送料拉簧	Spring	1	1
76	14022015	右销孔塞	spout plug	1	1
77	1140402700	倒送料曲柄组件	Feed reverse crank asm.	1	1
78	S01102	螺钉 SM3/16"x28 L=18	Screw SM3/16"x28 L=18	1	1
79	114S16004	螺母SM11/64"x40	Nut SM11/64"x40	1	1
80	W02015	GB/T93-1987 弹簧垫圈M4	Spring washer M4	1	1
81	114S30007	弹簧悬置螺钉	Screw	1	1

6

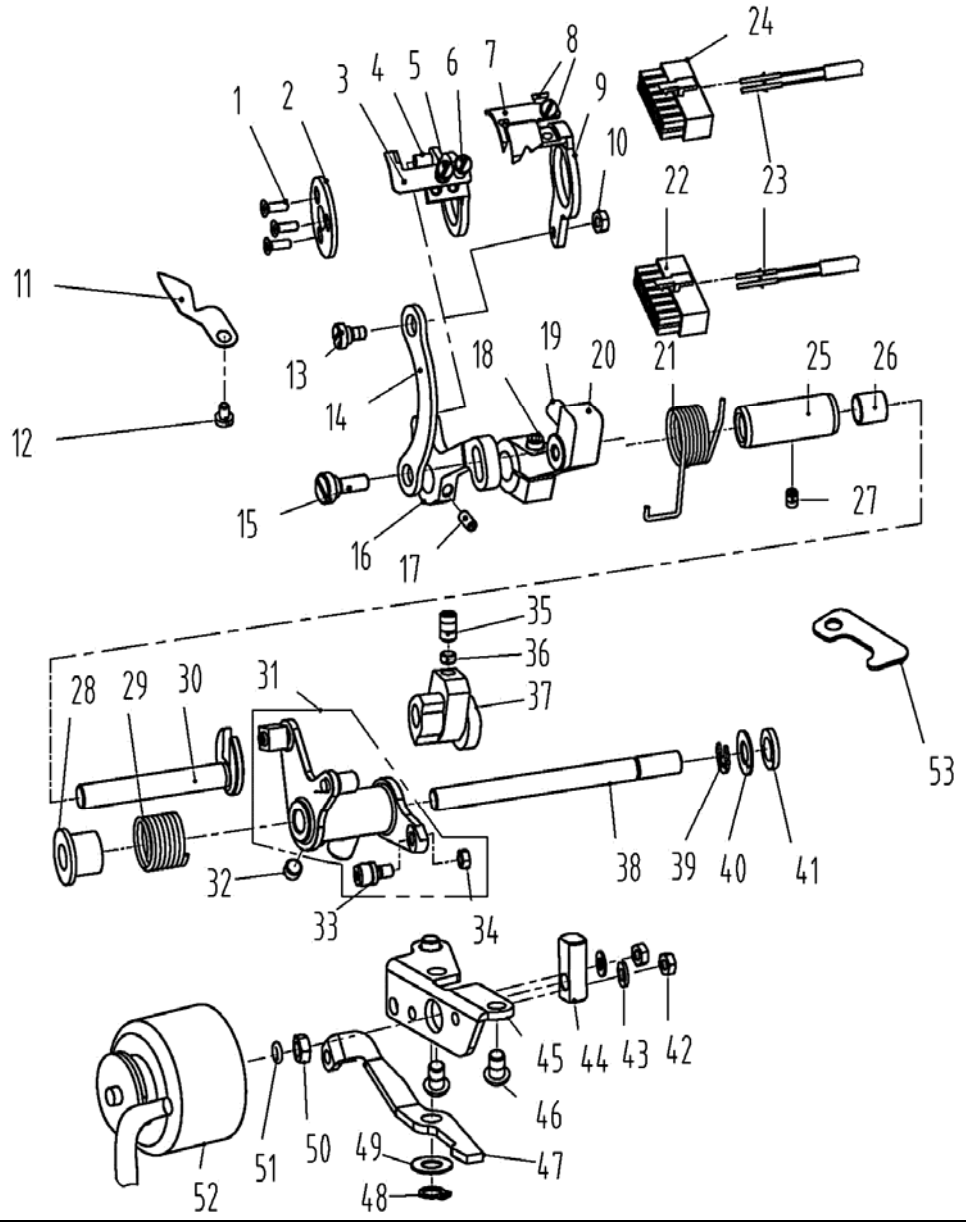
1
2
3
4
5
6
7
8
9
10
11
12
13
14
15
16
17
18
19
20
21
22
23
24
25
26
27
28
29
30
31
32
33
34
35
36
37
38
39
40
41
42
43
44
45
46
47
48
49
50
51
52
53

6. 自动剪线部件/Feed Mechanism Components

序号NO.	公司件号 Part NO.	名称 PartName	零件描述 Description	数量 Number	
1	114S17001	刀架压板螺钉	Screw	3	3
2	14112005	刀架压板	Knife bracket press component	1	1
3	14119002	辅助动刀	knife	1	1
4	1410700200	剪线辅刀架组件	Knife bracket	1	1
5	113S17002	活动刀固定螺钉SM11/64"x40 L=4.4	Screw SM11/64"x40 L=4.4	1	1
6	131S01002	螺钉SM11/64*40	Screw SM11/64*40	1	1
7	14119001	活动刀	knife	1	1
8	113S17002	活动刀固定螺钉SM11/64"x40 L=4.4	Screw SM11/64"x40 L=4.4	2	2
9	14107001	剪线主刀架	Knife bracket	1	1
10	114S16004	螺母SM11/64"x40	Nut SM11/64"x40	1	1
11	14112001	分线片	Needle guard patch	1	1
12	201S11009	螺钉SM9/64"x40 L=5.5	Screw SM9/64"x40 L=5.5	1	1
13	113S20001	连杆螺钉SM11/64"x40	hinge Screw SM11/64"x40	1	1
14	11312005	连杆	Connecting rod	1	1
15	141S20002	剪线曲柄轴位螺钉	Screw	1	1
16	14104003	剪线辅曲柄	Crank	1	1
17	S10007	GB/T80凹端紧定螺钉M4×4(发黑)	Screw	1	1
18	S05004	螺钉M5x14	Screw M5x14	1	1
19	11322001	驱动曲柄止动块	Stop block	1	1
20	14104001	剪线曲柄	Crank	1	1
21	11327001	弹簧	Spring	1	1
22	11230004	14孔接线器	Plug	1	1
23	11230005	电线插针	Pin	2	2
24	14130001	10孔接线器	Plug	1	1
25	14103003	剪线轴套	Thread cutting shaft bushing	1	1
26	11503005	驱动曲柄轴衬套	Crank drive shaft bushing	1	1
27	113S14002	螺钉SM11/64"x40 L=5.5	Screw SM11/64"x40 L=5.5	1	1
28	11322002	扭簧端盖	Spring cover	1	1
29	11327002	弹簧	Spring	1	1
30	14104002	剪线凸轮曲柄轴	Crank shaft	1	1
31	1400400100	剪线驱动组件	Thread trimmer drive asm.	1	1
32	116S14003	针杆曲柄销定位螺钉SM1/4"x40 L=4.5	Screw SM1/4"x40 L=4.5	1	1
33	11324001	滚柱	Roolling pin	1	1
34	113S16002	螺母SM11/64"x40	Nut SM11/64"x40	1	1
35	116S14005	螺钉SM1/4"x40 L=10	Screw SM1/4"x40 L=10	2	2
36	11309030	凸轮顶柱	Push rod	2	2
37	11310004	凸轮	Cam	1	1
38	14002004	切线驱动轴	Shaft	1	1
39	H05013	GB/T896-1986挡圈6	Snap ring 6	1	1
40	10112003	针杆曲柄护板	Cunter weight protecting	1	1
41	11322003	电磁铁缓冲片	Solenoid cushion rubber	1	1
42	N01001	螺母 M4	Nut M4	2	2
43	W01013	GB/T97.1-1985垫圈4.5	Washer	2	2
44	11309001	切线电磁铁顶销	Solenoid pin	1	1
45	1401200200	切线电磁铁支架组件	Bracket	1	1
46	S17002	GB/T70.2-2000内六角平圆头螺钉M6x10	Screw M6x10	2	2
47	14012001	切线杠杆	Tangent lever	1	1
48	H03015	GB/T894.1 卡簧8	Ring 8	1	1
49	10112003	针杆曲柄护板	Needle bar crank protecting plate	1	1
50	112S16006	螺母SM1/4"X40	Nut SM1/4"X40	1	1
51	O01004	O型圈	Rubber ring	1	1
52	1403003400	剪线电磁铁组件	Thread trimmer solenoid asm.	1	1
53	10112022	旋梭供油管压板	Plate	1	1

7

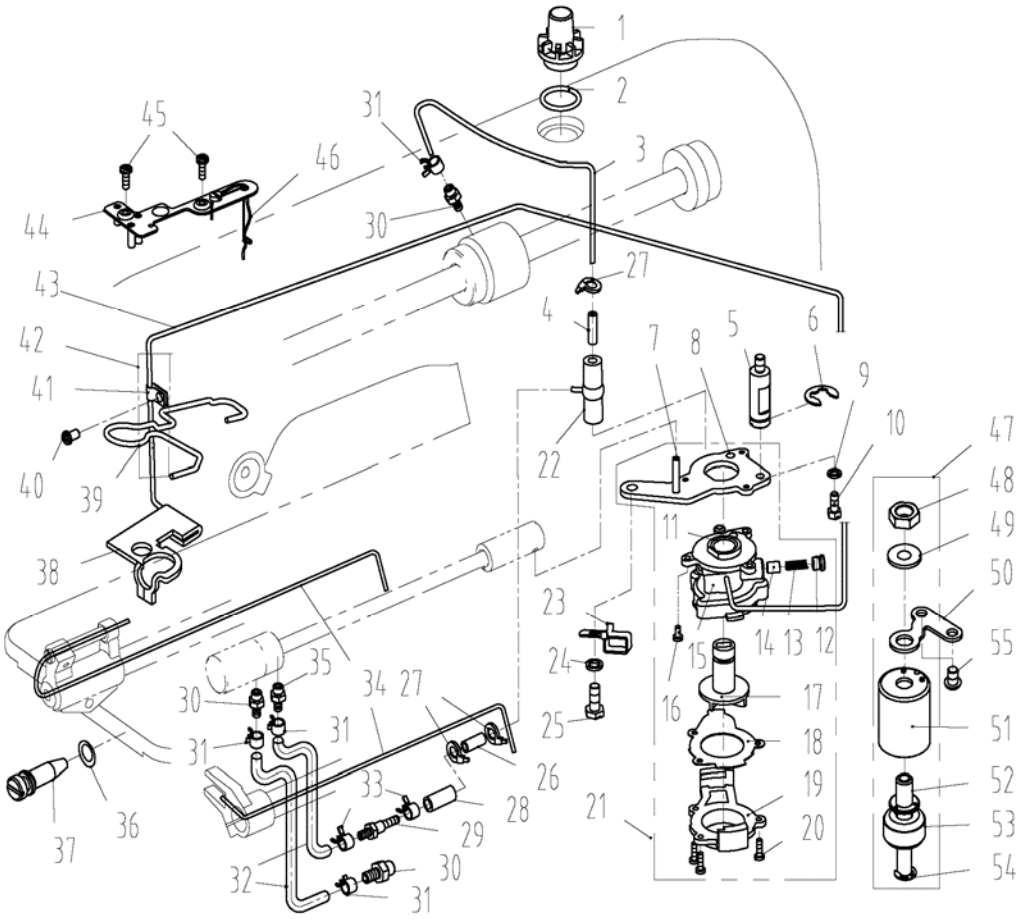
1
2
3
4
5
6
7
8
9
10
11
12
13
14
15
16
17
18
19
20
21
22
23
24
25
26
27
28
29
30
31
32
33
34
35
36
37
38
39
40
41
42
43
44
45
46
47
48
49
50
51
52
53
54
55

7. 润滑、油量检测部件/Oil Lublication、Oil Measuring Components

序号NO.	公司件号 Part NO.	名称 PartName	零件描述 Description	数量 Number	
1	11211004	油窗	Oil sight window	1	1
2	10122019	油窗O形圈	Rubber ring	1	1
3	14021001	油管Φ4×Φ6	Tubing Φ4xΦ6	0.46	0.46
4	14436001	铝油管Φ4.5xΦ6	Aluminum tubing Φ4.5xΦ6	1	1
5	112S30005	油泵连接螺柱	Oil pump connecting stud	1	1
6	11329010	开口挡圈10	Snap ring 10	1	1
7	10121001	下供油管	Hook driving shaft oil tube	1	1
8	10112020	油泵安装板	Oil pump installing base	1	1
9	W03002	弹垫	Spring washer	1	1
10	209S12001	压脚螺钉SM11/64 " ×40 L=10.5	Screw SM11/64 " ×40 L=10.5	1	1
11	10103022	油泵体衬套	Oil pump bushing	1	1
12	101S30007	柱塞螺钉	Plunger Screw	1	1
13	10127013	柱塞簧	Plunger spring	1	1
14	10122018	回油柱塞	Plunger	1	1
15	10120001	油泵体	Oil pump	1	1
16	S04009	油泵螺钉	Screw	3	3
17	10111003	油泵叶轮	Oil pump impeller	1	1
18	10112021	油泵叶轮托板	Oil pump impeller cover	1	1
19	10111007	油泵盖	Lubricating oil pump cover	1	1
20	101S30006	螺钉	Screw	3	3
21	1012000100	油泵分部件	Lubricating oil pump component	1	1
22	10136001	供油管接头	Rubber joint	1	1
23	14112007	过线勾	Over wire hook	1	1
24	W02004	GB/T93-1987弹垫M6	Spring Washer M6	1	1
25	116S30003	抬牙叉固定螺钉SM15/64 " ×28 L=14.5	Screw SM15/64 " ×28 L=14.5	1	1
26	14021003	铝油管	Aluminum tubing	1	1
27	11211005	尼龙扎带	Cable band	4	4
28	14021001	油管 140mm	Tubing 140mm	0.14	0.14
29	14036004	油盘油嘴	Oil nozzle	1	1
30	14036002	回油嘴	Oil nozzle	3	3
31	20429001	油管卡簧6.5	Oil pipe clamp spring	4	4
32	14021001	油管 115mm	Tubing 115mm	0.23	0.23
33	11412055	油管卡簧5.7	Oil pipe clamp spring	2	2
34	10423005	油线	Oil wick	1	1
35	14036003	供油嘴	Oil nozzle	1	1
36	14022011	O型圈	Rubber ring	1	1
37	140S30001	油量调节螺钉	Oil volume adjusting screw	1	1
38	14423001	回油毡	Oil felt felt	1	1
39	14427003	回油毡夹	Asphalt felt clamp	1	1
40	101S11004	挑线杆护罩螺钉SM3/16"×28 L=7	Screw SM3/16"×28 L=7	1	1
41	10112023	回油管夹	Oil tube clamp	1	1
42	10121007	回油管组件	Oil return tube component	1	1
43	10121008	回油管	Oil return tube	1	1
44	10112025	油线固定板	Oil line fixing plate	1	1
45	101S11010	压脚扳手螺钉SM9/64"x40 L=11	Screw SM9/64"x40 L=11	2	2
46	10123010	油线	Oil wick	1	1
47	1443000900	油量检测装置组件	Oil measuring device	1	1
48	N01009	螺母	Nut	1	1
49	W02003	弹性垫圈	Washer	1	1
50	14012006	油量检测装置固定板	Pull spring fixing plate	1	1
51	14011004	油量检测罩壳	Shell	1	1
52	14002005	导向柱	Guide pillar	1	1
53	14011002	浮子	Float	1	1
54	H05009	开口挡圈	Ring	1	1
55	101S11026	油泵安装螺钉SM15/64"x28 L=9	Screw SM15/64"X28 L=9	2	2

8

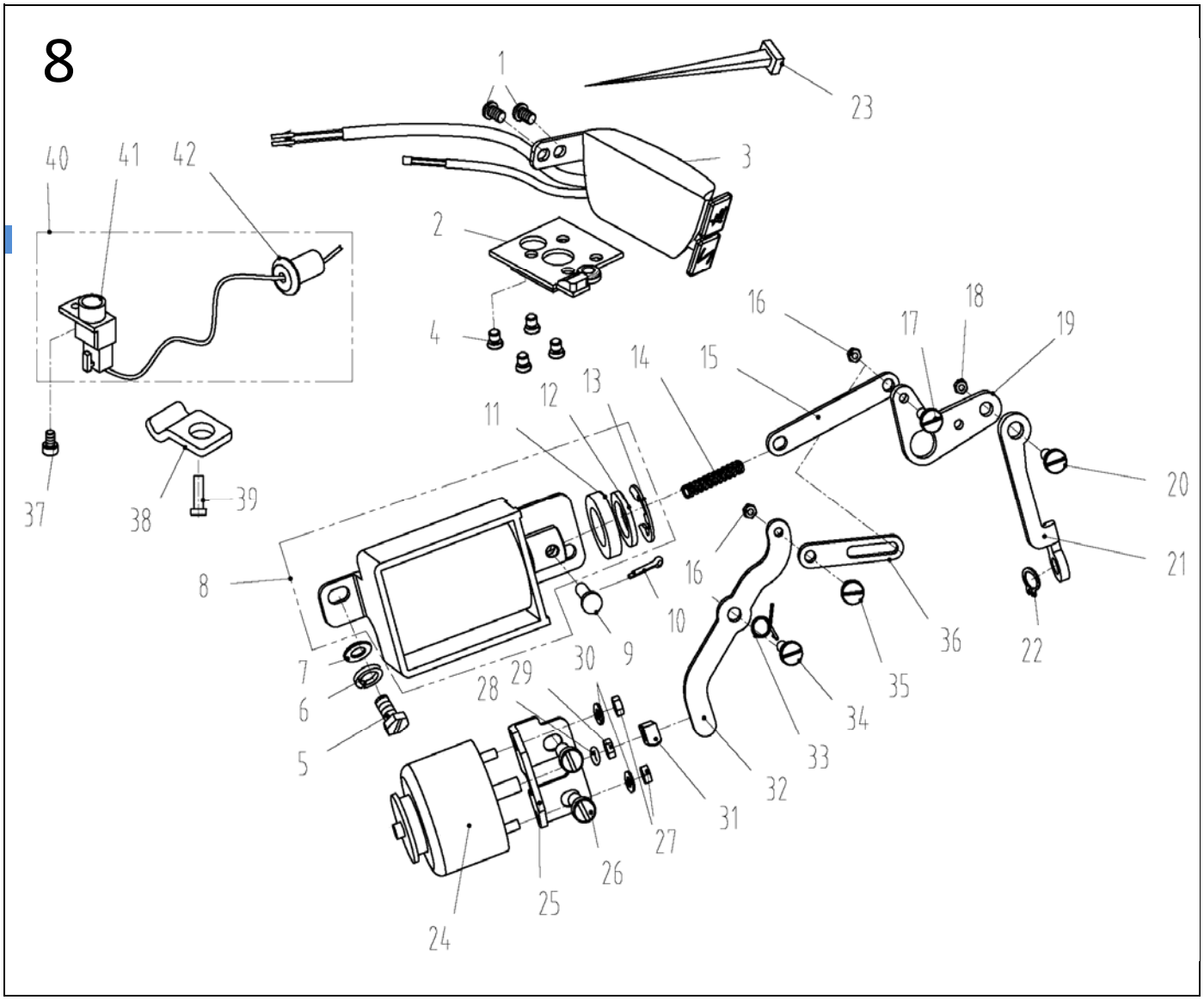
1
23
3
40
41
42
2
4
16
17
18
19
14
15
13
12
11
20
21
37
38
39
8
16
10
9
30
36
22
7
6
5
28
29
35
34
33
32
31
27
26
25
24

8. 自动倒送料、感应抬压脚部件/Automatic Reverse Feed Components

序号NO.	公司件号 Part NO.	名称 PartName	零件描述 Description	数量 Number	
1	101S11004	挑线杆护罩螺钉SM3/16"×28 L=7	Screw SM3/16"×28 L=7	2	2
2	1443000700	LED灯组件	LED Light asm	1	1
3	1443000400	双开关组件	Double switch components	1	1
4	131S02001	螺钉 3/16×28 L=6.5	Screw 3/16×28 L=6.5	4	4
5	116S30003	抬牙叉固定螺钉SM15/64"×28 L=14.5	Screw SM15/64"×28 L=14.5	2	2
6	W02004	GB/T93-1987弹垫M6	Spring washer M6	2	2
7	11628005	抬牙叉固定螺钉垫圈	Washer	2	2
8	1443001000	自动倒送料电磁铁	Auto reverse feed solenoid	1	1
9	11326005	销子	Pin	1	1
10	P04001	开口销 GB/T91 2×14	Cotter pin	1	1
11	11322040	橡胶垫片	rubber plunger	1	1
12	11328031	垫片	Washer	1	1
13	H05014	GB/T896-1986开口挡圈	Snap ring	1	1
14	11227006	自动倒送料连杆顶弹簧	Plunger spring	1	1
15	13812034	自动倒送料连杆	Auto reverse feed connecting rod	1	1
16	112S16008	曲柄短螺母SM11/64"×40	Nut SM11/64"×40	2	2
17	141S20004	曲柄短螺钉SM11/64"×40	Hinge Screw SM11/64"×40	1	1
18	112S16007	曲柄长螺母SM1/4"×28	Nut SM1/4"×28	1	1
19	14104005	自动倒送料曲柄	Auto reverse feed crank	1	1
20	112S20001	曲柄长螺钉 SM1/4"×28	Hinge Screw SM1/4"×28	1	1
21	11212029	自动倒送料拉杆	Auto reverse feed pull shaft	1	1
22	14029003	轴用弹性挡圈7(厚0.8mm)	External Circlips 7	1	1
23	11211005	尼龙扎带	Cable band	8	8
24	1443000800	短线头电磁铁组件	Thread trimmer solenoid asm.	1	1
25	14112002	短线头电磁铁支架	Bracket	1	1
26	101S11026	油泵安装螺钉SM15/64"x28 L=9	Screw SM15/64"X28 L=9	2	2
27	N01001	螺母 M4	Nut M4	2	2
28	O01004	O型圈	Rubber ring	1	1
29	112S16006	螺母SM1/4"X40	Nut SM1/4"X40	1	1
30	W01013	GB/T97.1-1985垫圈4.5	Washer	2	2
31	14126001	短线头电磁铁顶销	pin	1	1
32	14105001	短线头连杆	rod	1	1
33	14127001	复位扭簧	Lower sensor	1	1
34	141S20001	倒送料连杆轴位螺钉	Screw	1	1
35	141S20003	轴位螺钉SM11/64"x40	Screw SM11/64"X40	1	1
36	14105002	辅助连杆	rod	1	1
37	S05254	GB/T70.1-2000螺钉M2.5×4	Screw M2.5×4	1	1
38	14013022	过线压板	Wire guide press plate	1	1
39	201S11012	螺钉SM9/64"x40	Screw SM9/64"x40	1	1
40	1403004100	下感应探头组件	Lower induction probe asm	1	1
41	1403004000	下感应探头	Lower induction probe	1	1
42	13822030	橡皮塞（单孔）	Rubber plug	1	1

9

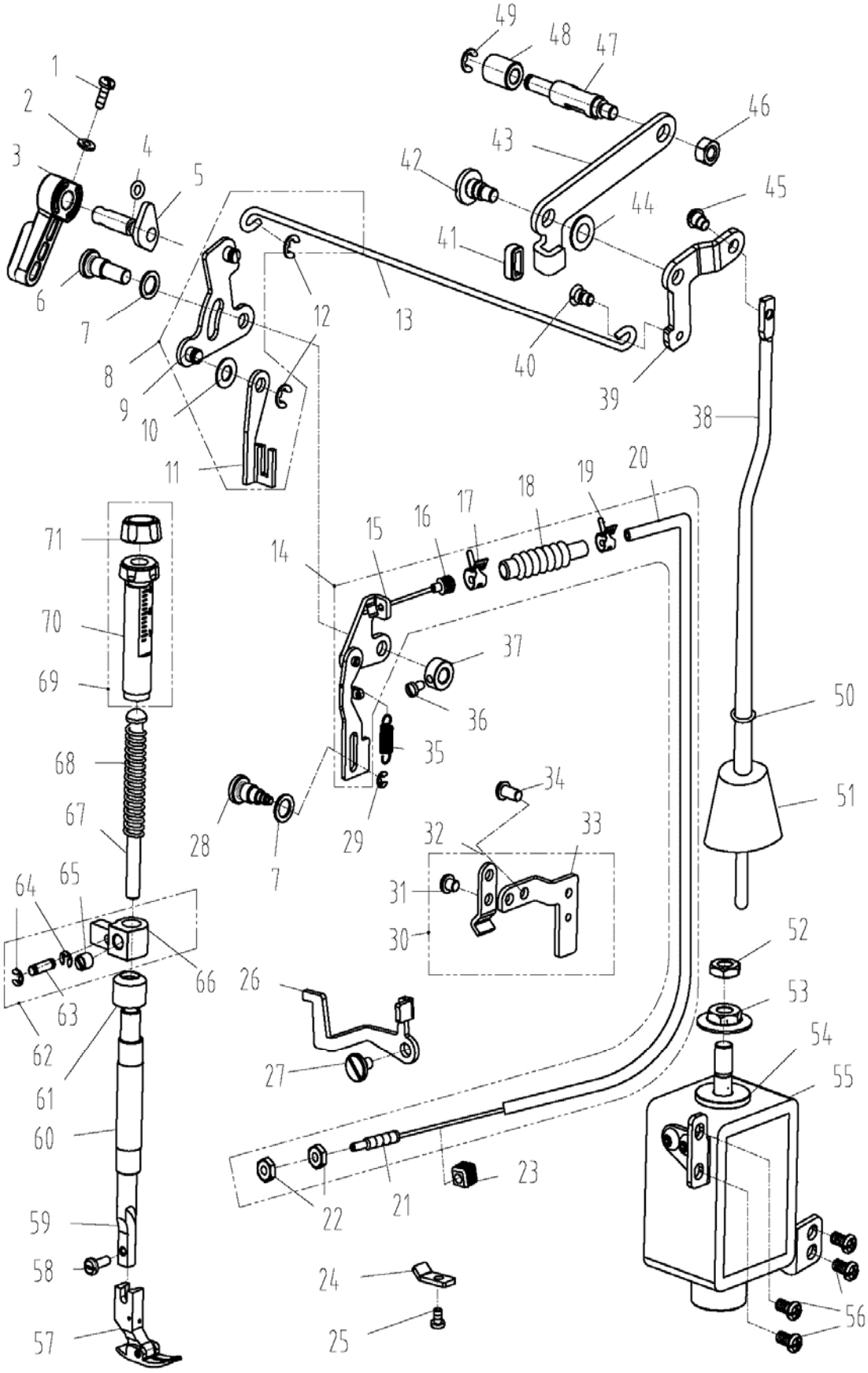
1
2
3
4
5
6
7
8
9
10
11
12
13
14
15
16
17
18
19
20
21
22
23
24
25
26
27
28
29
30
31
32
33
34
35
36
37
38
39
40
41
42
43
44
45
46
47
48
49
50
51
52
53
54
55
56
57
58
59
60
61
62
63
64
65
66
67
68
69
70
71

9. 压料、自动抬压脚部件 /Presser Bar ，Auto Lifter Components

序号NO.	公司件号 Part NO.	名称 PartName	零件描述 Description	数量 Number	
1	101S11010	压脚扳手螺钉SM9/64"x40 L=11	Screw SM9/64"x40 L=11	1	1
2	10128002	压脚扳手螺钉垫圈	Washer	1	1
3	13811029	压脚扳手	Hand lifter	1	1
4	O01004	O型圈	Rubber ring	1	1
5	1441000200	压脚扳手凸轮分部件	Hand lifter cam asm.	1	1
6	131S20001	前杠杆螺纹销	Screw	1	1
7	10128016	螺纹销橡胶垫圈(薄)	Washer	2	2
8	1441200300	前杠杆组件	Front lever assembly	1	1
9	1441200400	抬压脚前杠杆分部件	Lift front lever component	1	1
10	14428002	垫圈6.5x13x0.8	Washer 6.5x13x0.8	1	1
11	14412005	压脚升降板	Lifting plate	1	1
12	H05003	GB/T896-1986 挡圈 5	Snap ring 5	2	2
13	14412006	拉杆	Pull rod	1	1
14	1441200700	松线顶板组件	Pine line roof asm.	1	1
15	1441200800	拉线板组件	Loose line roof asm.	1	1
16	14036006	密封接头	Seal joint	1	1
17	14029002	卡簧 Φ8	Circlip Φ8	1	1
18	14022006	松线管密封套	Loose pipe sealing sleeve	1	1
19	14029001	卡簧 Φ6	Circlip Φ6	1	1
20	1442201000	拉线套组件	Pull sleeve assembly	1	1
21	140S30006	拉线接头螺钉	Pull joint screw	1	1
22	113S12001	螺母 SM3/16"x32	Nut SM3/16"x32	2	2
23	14022007	松线导管密封塞	Sealing plug	1	1
24	14012005	松线导管下压板	Wire presser	1	1
25	113S11004	松线导管压板螺钉M4x8	Screw M4x8	1	1
26	14412009	松线杠杆	Loose lever	1	1
27	131S20003	松线杠杆轴位螺钉D=6.35	Loose lever lever screw D=6.35	1	1
28	144S20002	松线顶板螺纹销	Wire release plate pin	1	1
29	H05002	GB/T896-1986挡圈3	Snap ring	1	1
30	1441201000	松线导管上支架组件	Loose wire catheter support assembly	1	1
31	113S11004	松线导管压板螺钉M4x8	Screw M4x8	1	1
32	14012010	松线导管上压板	Wire release press plate	1	1
33	14412010	松线导管上支架	Wire release bracket upper	1	1
34	101S11001	后窗板螺钉	Screw	2	2
35	14427002	松线顶板复位拉簧	Spring	1	1
36	114S11015	割线刀螺钉 SM9/64"x40	Screw SM9/64"x40	1	1
37	13108001	挡圈	Ring	1	1
38	14412011	抬压脚顶杆	Presser foot lever	1	1
39	14412012	膝控抬压脚后杠杆	Knee control lever rear lever	1	1
40	101S20004	抬牙脚拉杆螺钉	Lift rod screw	1	1
41	14422006	抬压脚后杠杆橡胶垫	Rubber pad	1	1
42	144S20004	后杠杆轴位螺钉	Hinge screw	1	1
43	14412015	自动抬压脚后杠杆	Knee lifter back lever	1	1
44	14428001	平垫圈8.2×15×1	Flat washer 8.2×15×1	1	1
45	144S20003	抬压脚顶杆轴位螺钉	Axial screw	1	1
46	N01012	GB/T6170-1986螺母M6(镀镍)	Nut M6	1	1
47	14402006	自动抬压脚顶柱	Knee lifter connecting rod	1	1
48	14411001	塑料滚轮	Whell	1	1
49	11329020	挡圈5	Snap ring 5	1	1
50	12928008	平垫圈5.6x9.7x0.8	Wwasher 5.6x9.7x0.8	1	1
51	14022017	抬压脚顶杆密封帽	Seal cap	1	1
52	N01028	GB/T6172.1-2000薄螺母M8(镀锌)	Thin nut M8	1	1
53	113S16004	法兰螺母M8	Flange nuts M8	1	1
54	11322008	电磁铁上垫片	washer	1	1
55	1443000200	抬压脚电磁铁组件	Solenoid asm.	1	1
56	101S11001	后窗板螺钉	Screw	4	4
57	1311600100	活压脚组件	Presser foot asm.	1	1
58	101S11009	活压脚螺钉 SM9/64"x40 L=10.5	Screw SM9/64"x40 L=10.5	1	1
59	11402009	压杆	Presser bar	1	1
60	10103012	压杆衬套	Presser bar bushing,lower	1	1
61	10122112	压杆防油套	Pressure bar oil cover	1	1
62	1440900200	压杆导架组件	Strut guide asm.	1	1
63	14426002	压杆导架插销	Push rod guide pin	1	1
64	H05002	GB/T896-1986挡圈3	Snap ring	2	2

65	101S15007	压杆导架螺钉 SM1/4"x40 L=8	Screw SM1/4"x40 L=8	1	1
66	14409002	压杆导架	Presser bar guide bracket	1	1
67	10102003	调压导杆	Press regulating guide bar	1	1
68	10127023	调压弹簧	Press regulating spring	1	1
69	1381102700	调压螺钉组件	Press regulating screw asm.	1	1
70	13811027	调压螺钉	Press regulating screw	1	1
71	13811028	调压螺母	Press regulating nut	1	1

10

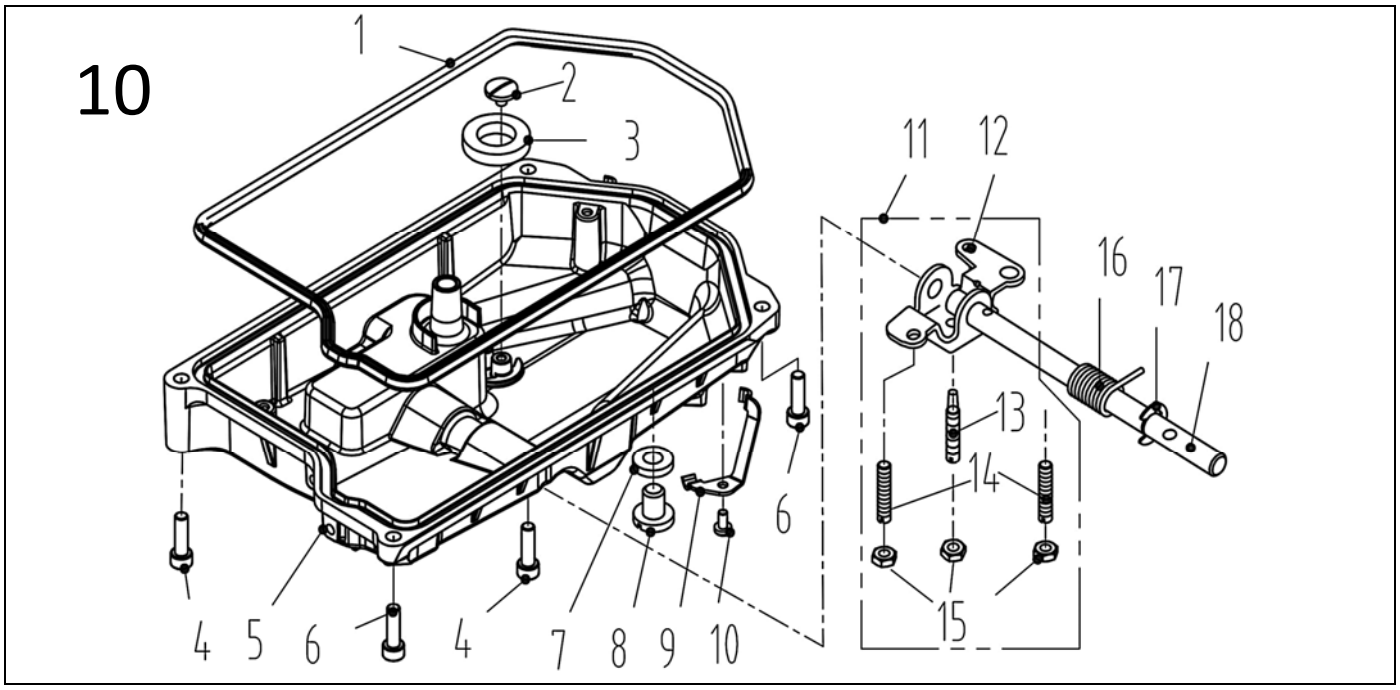

10. 油盘、膝控抬压脚部件/Oil Ceservoir，Knee Lifter Components

序号NO.	公司件号 Part NO.	名称 PartName	零件描述 Description	数量 Number	
1	14022001	油盘密封垫	Seal	1	1
2	101S11023	送料调节器轴端螺钉	Screw	1	1
3	10131001	油盘磁铁	Oil reservoir magnet	1	1
4	S05242	油盘固定螺钉M6x40	Screw M6 L=40	2	2
5	14001005	油盘	Oil reservoir	1	1
6	S05240	油盘固定螺钉M6x20	Screw M6 L=20	2	2
7	O01005	GB/T3452.1-1992O型圈 7.5×1.8	O ring 7.5×1.8	1	1
8	114S11011	齿轮箱盖螺钉	Screw	1	1
9	14013023	电线压板	Wire clamp	1	1
10	113S11004	松线导管压板螺钉M4x8	Screw M4x8	1	1
11	1401202700	抬压脚双向曲柄组件	Knee lifter crank asm	1	1
12	10112027	抬压脚双向曲柄	Knee lifter crank	1	1
13	140S10002	双向曲柄螺钉	Screw	1	1
14	101S15012	双向曲柄限位调节螺钉M6 L=20	Screw M6 L=20	2	2
15	101S16004	双向曲柄限位调节螺母 M6	Nut M6	3	3
16	14027016	双向曲柄扭簧	Knee lifter spring	1	1
17	H05010	GB/T896-1986挡圈11	Snap ring 11	1	1
18	1400200100	抬压脚轴组件	Knee lifter shaft	1	1

11

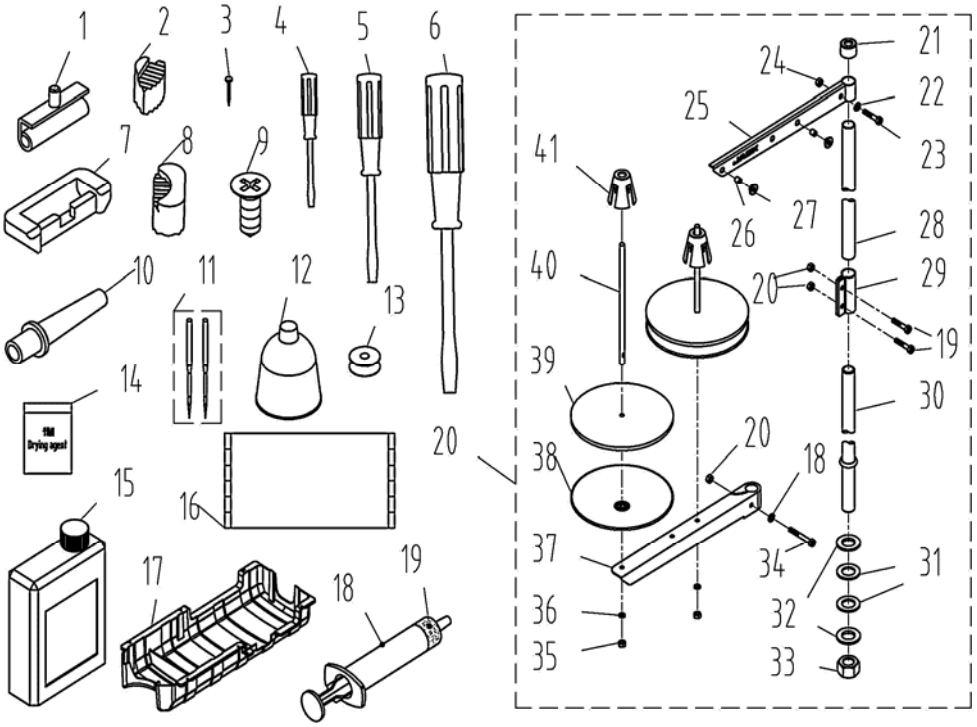
1
2
3
4
5
6
7
8
9
10
11
12
13
14
15
16
17
18
19
20
21
22
23
24
25
26
27
28
29
30
31
32
33
34
35
36
37
38
39
40
41

11. 机头附件/Machine Head Accessories

序号NO.	公司件号 Part NO.	名称 PartName	零件描述 Description	数量 Number	
1	1011203100	机头连接钩组件	Hinge component	2	2
2	14022022	机头座垫	Die cushion	2	2
3	101S30010	机头连接钩座钉	Nail	4	4
4	10131004	螺丝刀（小）	Screw driver,small	1	1
5	10131003	螺丝刀（中）	Screw driver,medium	1	1
6	20731047	螺丝刀（大）	Screw driver,large	1	1
7	10122060	机头连接钩座	Head connecting rubber cushion	2	2
8	14022023	机头支架	Nose support	2	2
9	101S30014	木螺钉M4×20	Wood screw M4×20	6	6
10	10111011	机头支柱	Machine head rest pin	1	1
11	10117021	机针（14#）	Needle	4	4
12	20131039	漏斗	Funnel	1	1
13	10118003	梭心	Bobbin	2	2
14	20131075	干燥剂	Drying agent	1	1
15	1011101200	油箱组件	Oiler component	1	1
16	13831018	防尘罩	Dust cover	1	1
17	14411002	油盘托盘	Disk tray	1	1
18	11411029	注射器	Syringe	1	1
19	11431038	进口黄油	Butter	0.003g	0.003g
20	1383100300	线架组件	Thread stand asm.	1	1
21	20131019	线架杆顶防护橡皮	Spool rest rod rubber cap	1	1
22	S04050	螺钉M5 L=16	Screw M5 L=16	3	3
23	W01047	垫圈M5	Washer M5	2	2
24	N01034	螺母M5	Nut M5	4	4
25	13831022	上线架过线杆	Spool rest arm upper	1	1
26	10113011	过线圈（内）	Thread guide ring	2	2
27	10113010	过线圈(外)	Thread guide ring	2	2
28	13831019	线架杆上节	Spool rest rod upper	1	1
29	13831021	线架杆接头	Spool rest rod joint	1	1
30	13831020	线架杆下节	Spool rest rod lower	1	1
31	10122106	橡胶垫圈	Spool rest rod rubber ring	2	2
32	W01048	垫圈M16	Washer M16	2	2
33	N02004	螺母 M16	Spool rest rod nut M16	1	1
34	S04051	螺钉 M5	Spool rest arm lower screw M5	1	1
35	N01034	螺母 M5	Nut M5	2	2
36	W02027	弹簧垫圈 M5	Spring washer M5	2	2
37	13831023	下线架过线杆	Spool rest arm lower	1	1
38	13831024	线盘	Spool rest	2	2
39	20131010	线盘垫	Spool rest cushion	2	2
40	20131006	线盘钉	Spool pin	2	2
41	13831025	线团防松垫	Spool retainer	2	2

12

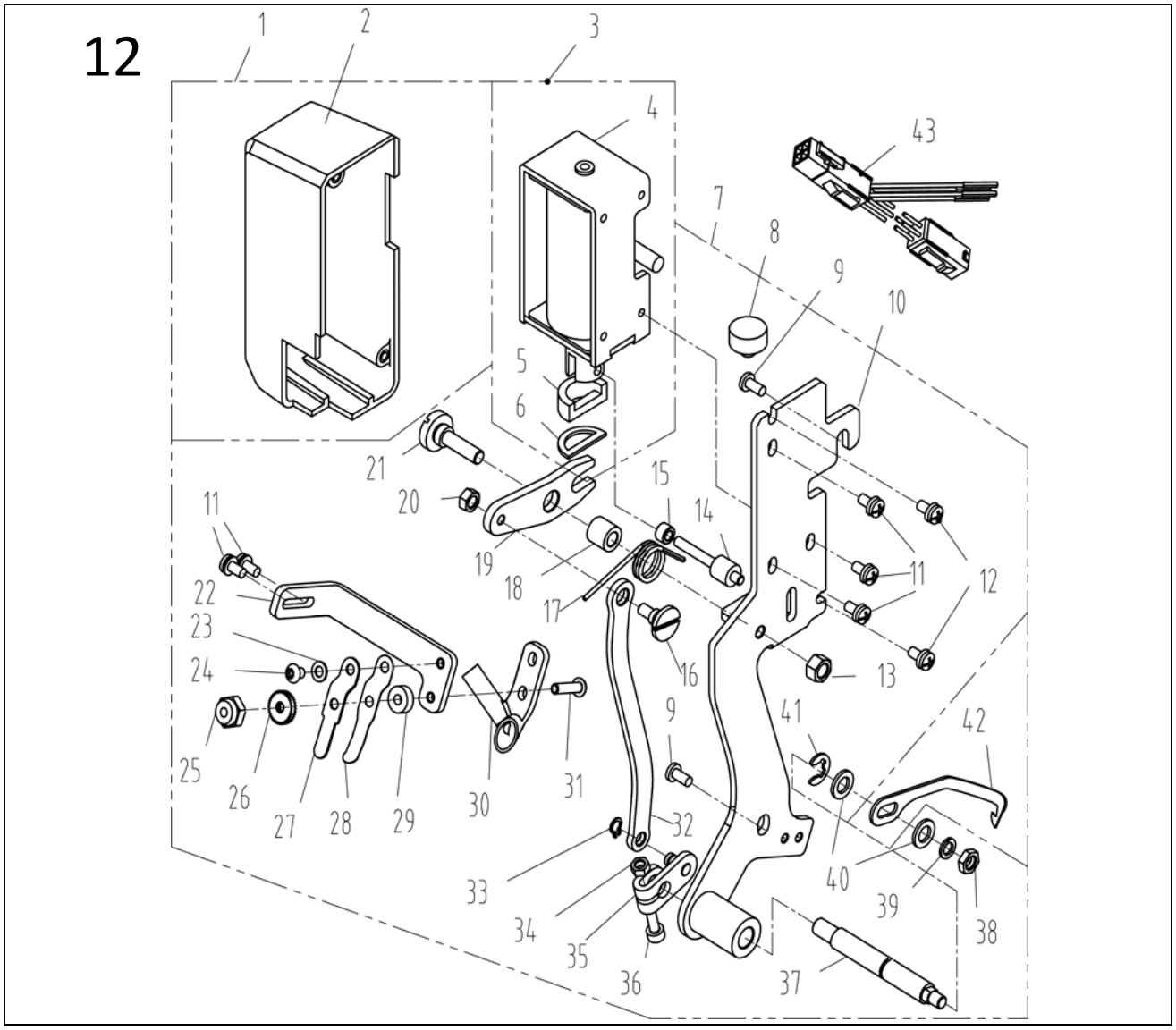
1
2
3
4
43
7
8
9
10
5
6
21
20
15
14
11
19
18
17
12
22
23
24
16
13
25
26
27
28
29
30
31
9
41
42
32
33
40
39
38
34
35
36
37

12. 少鸟巢装置（-N系列）/Little Bird's Nest Components (-N Series)

序号NO.	公司件号 Part NO.	名称 PartName	零件描述 Description	数量 Number	
1	1441200100	勾线装置组件	Wire laying device asm	1	1
2	14411003	罩壳	Shell	1	1
3	1443000600	拨线电磁铁组件	Dial the line electromagnet components	1	1
4		拨线电磁铁	Dial the line electromagnet	1	1
5	14022026	橡皮垫	Rubber mat	1	1
6	14028020	缓冲垫片	Buffer gasket	1	1
7	1401200400	勾线支架组件（含吸嘴）	Hook bracket asm (including suction nozzle)	1	1
8	14022027	橡皮垫块	Rubber pad	1	1
9	101S11001	后窗板螺钉SM3/16"x28 L=9	After throwing a screw	2	2
10	1401200700	拨线电磁铁支架组件	Dial the line electromagnet stent components	1	1
11	S15010	GB/T9074.8 十字槽小盘头螺钉组合件M3×6	Screw asm M3x6	3	3
12	S15011	GB/T9074.8 十字槽小盘头螺钉组合件M3×8	Screw asm M3x8	2	2
13	140S16008	拨线传动板轴位螺母	Dial the line shaft drive plate a nut	1	1
14	14026004	拨线传动销	Dial the line drive pin	1	1
15	14008001	滑动衬套	The sliding sleeve	1	1
16	140S20021	拨线连杆轴位螺钉	Dial the line connecting rod shaft screw	1	1
17	14027020	复位弹簧	Reset spring	1	1
18	14003008	复位衬套	Reset the bushing	1	1
19	14012024	拨线传动板	Dial the line drive board	1	1
20	140S16007	拨线连杆轴位螺母	Dial the line connecting rod shaft nut	1	1
21	140S20020	拨线传动板轴位螺钉	Dial the line drive board shaft screw	1	1
22	14012021	压片支架	Tablet bracket	1	1
23	W01099	GB/T848-2002小垫圈A级3×0.5	Small washer	1	1
24	S17010	GB/T70.2-2000内六角平圆头螺钉M3×4	Allen flat round head screw	1	1
25	N08001	GB/T889.1-2015六角锁紧螺母M3	Nut M3	1	1
26	N06001	滚花螺母3	Knurl nut	1	1
27	14013011	压片	tablet	1	1
28	14013010	滑压片	Sliding tablet	1	1
29	14022025	橡胶圈	Rubber ring	1	1
30	14011005	吸嘴	Suction nozzle	1	1
31	S17011	GB/T70.2-2000内六角平圆头螺钉M3×12	Allen flat round head screw	1	1
32	14012020	拨线连杆	Dial the line connecting rod	1	1
33	H03055	GB/T894.1-1986轴用挡圈A型4	Shaft with a collar	1	1
34	N01050	GB/T6170-2000六角螺母M3	Hexagonal nut	1	1
35	1401200800	拨线驱动连杆组件	Line drive connecting rod components	1	1
36	S05037	GB/T70.1-2000内六角圆柱头螺钉M3×12	Hex cylinder head screw	1	1
37	14002008	拨线驱动轴	Line drive shaft	1	1
38	N01051	GB/T6170-2000六角螺母M4	Hexagonal nut	1	1
39	W02100	GB/T93-1987弹簧垫圈4×0.8	Spring washer	1	1
40	W01098	GB/T6170-2000小垫圈A级5×1	Small washer	2	2
41	11329020	开口挡圈5	Open ring	1	1
42	14013009	线勾	Wire hook	1	1
43	14011007	吸风装置转接线	Suction line	1	1