GLOBAL

DN-2220 DN-2220/LH
DN-2220-AUT DN-2220/LH-AUT

2-NEEDLE HIGH SPEED SPLIT NEEDLE BAR LOCKSTITCH INDUSTRIAL SEWING MACHINE

INSTRUCTION MANUAL
SPARE PARTS LIST

Global International BV
H. Figeeweg 4
2031 BJ Haarlem
tel: 023-5319584
fax: 023-5311022
e-mail: global@imca.net

Global Parts bv
H. Figeeweg 4B
2031 BJ Haarlem
tel: 023-5425312
fax: 023-5423422
e-mail: globalparts@planet.nl

CSMP

CONTENTS

PRECAUTIONS BEFORE STARTING OPERATION ---- 1

PREPARATION FOR OPERATION

1. Power cable connection ---- 2
2. Connection of control box ---- 3
3. Adjustment of needle bar stop position ---- 3

CAUTIONS ON USE

1. Oiling (1) ---- 4
2. Oiling (2) ---- 4
3. Oiling condition ---- 4
4. Adjustment of oiling to rotating hook ---- 5
5. Cautions on operation ---- 5

OPERATION

1. Installation of needles ---- 5
2. Winding of bobbin thread ---- 6
3. Selection of thread ---- 6
4. Threading of needle threads ---- 6
5. Adjustment of feed (stitch) length and stitch reversing (touch-back) ---- 7
6. Setting of bobbin ---- 7
7. Adjusting of needle thread guide ---- 7
8. Threading of bobbin threads ---- 8
9. Tension adjustment of bobbin threads ---- 8
10. Balance of thread tension ---- 8
11. Needle thread tension ---- 8
12. Adjustment of presser foot pressure ---- 9
13. Timing between rotating hook motion and needle motion ---- 9
14. Adjustment of feed dog height ---- 10
15. Relationship between rotating hook motion and take-up lever motion ---- 10
16. Relationship between hook motion and opener motion ---- 11
17. Relationship between needle motion and feed dog motion ---- 11
18. Installation of movable knife ---- 12
19. Adjustment of thread trimmer cam ---- 13
20. Adjustment of meshing pressure of movable knife and fixed knife ---- 14
21. Sharpening of fixed knife ---- 14
22. Adjustment for change of needle gage ---- 15
23. Wiper adjustment ---- 16

SPECIFICATIONS ---- 17

PARTS CATALOG

1. Arm bed its accessories ---- 18
2. Thread tension regulator mechanism ---- 20
3. Arm shaft & presser foot mechanism ---- 23

4. Needle bar rocking motion mechanism ---- 26
5. Stitch regulator mechanism ---- 28
6. Lower shaft & feed rock shaft mechanism ---- 30
7. Hook saddle mechanism ---- 33
8. Knife mechanism (一) ---- 36
9. Knife mechanism (二) ---- 38
10. Touch back mechanism & detector mechanism ---- 41
11. Wiper mechanism ---- 43
12. Oil lubrication mechanism ---- 45
13. Accessories ---- 48

GAUGE PARTS ---- 51

PRECAUTIONS BEFORES STARING OPERATION

1. Safety precautions

1) When turning the power on, keep your hands and fingers away from the area around/under the needle and the area around the pulley.
2) Power must be turned off when the machine is not used, or when the operator leaves his/her seat.
3) The power must be turned off before tilting the machine head, installing or removing the "V" belt, adjusting the machine, or when replacing.
4) Avoid placing fingers, hairs, bars etc. near the pulley, "V" belt, bobbin winder pulley, or motor when the machine is operation. Injury could result.
5) Do not insert fingers into the thread take-up cover, under/round the needle, or pulley when the machine is in operation.
6) If a belt cover, finger guard, and/or eye guard are installed, do not operate the machine without these safety devices.

2. Precaution before Starting Operation

1) If the machine's oil pan has an oil sump, never operate the machine before filling it.
2) If the machine is lubricated by a drop oiler, never operate the machine before lubricating.
3) When a new sewing machine is first turned on, verify the rotational direction of the pulley with the power on. (the pulley should rotate counterclockwise when viewed from the pulley.)
4) Verify the voltage and (single or three) phase with those given on the motor nameplate.

3. Precaution for Operating Conditions

1) Avoid using the machine at abnormally high temperature (35℃ or higher) or low temperature (5℃or lower). Otherwise, machine failure may result.
2) Avoid using the machine in dusty conditions.
   Avoid using the machine in areas where too much electrical noise, resulted from the high-frequency welder and others, is generated.

PREPARATION FOR OPERATION

overall view of assembled sewing machine

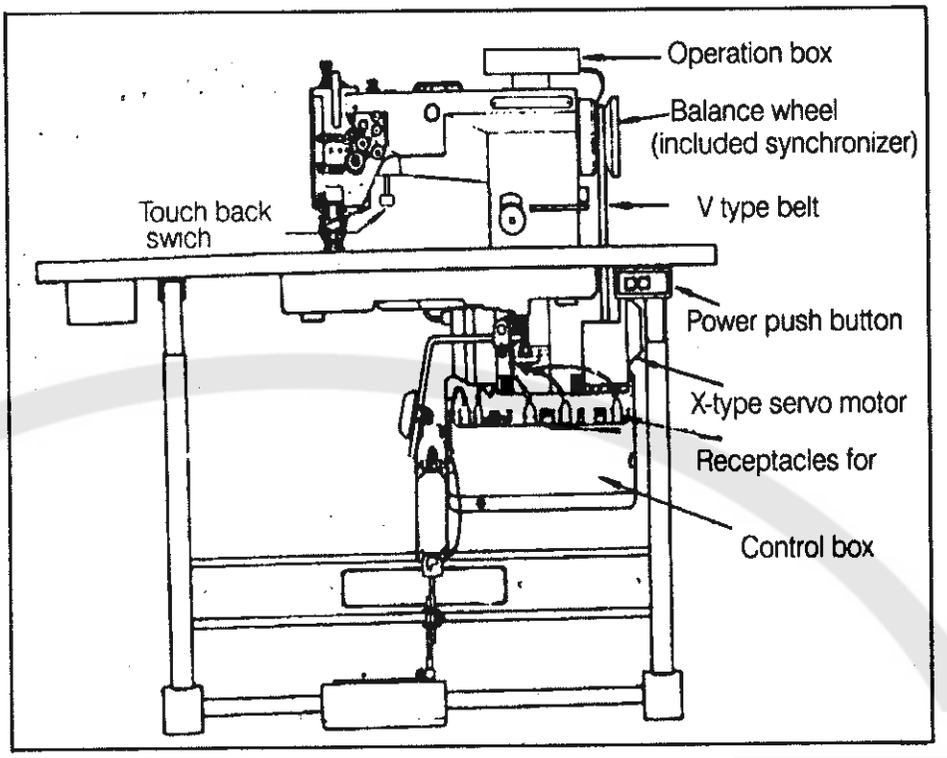

1. Power cable connection

1) Connection to Power Supply

When connecting the power supply connector to the control box, the connector should be completely plugged in the proper receptacle after confirming the connector type and matching direction.

A. In case of three-phase electrical power system, the "U" phase should be connected to the red lead, the "V" phase to the white lead, and the "W" phase to the black lead. The motor rotary direction depends, however, upon the setting of the internal switch in the control box as described in Paragraph 1-(3)

CAUTION: The green wire must be connected to the ground terminal in order to ground the motor properly.

B. The appropriate power fuse capacity is as follows.

Power supply 200V-240V: 10A
100V-120V: 15A

2) Lamp Leads

A. When installing the illuminating lamp (6V,15-20W),The connecting wire is attached on the back of the Control box. It should be removed and connected by removing the insulating tube from the wire and stripping properly.

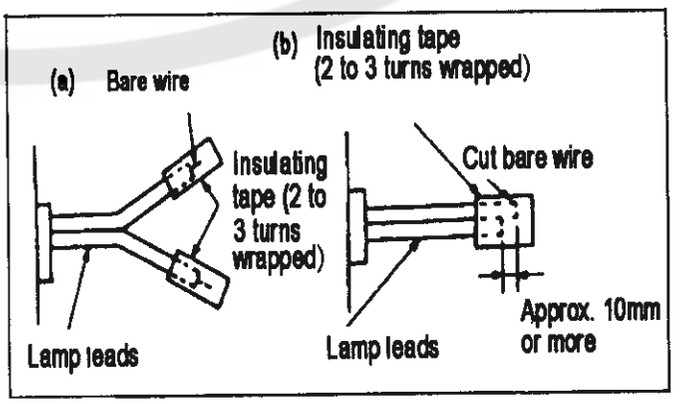

The wire connections should be, then, insulated by wrapping insulating tape on the wires.

CAUTION: The power switch must be Turned off before connecting the lamp.

B. When the illuminating lamp is not used, the end of the lamp leads must be insulated as (a) or (b) as shown in the figure on right side. If a short circuit occurs failing to insulate, the transformer in the control box will be possibly burned out.

CAUTION: The illuminating lamp must not be connected with any heater, such as a foot warmer and others, in parallel. Otherwise, the load capacity will be exceeded. It may cause transformer winding burned out.

3) Rotary direction

It is possible to change the rotary direction of the motor by removing the rubber cap from the bottom left side of the front cover on the control box, and push the internal direction selector switch. The built-in lamp in the internal switch is off when the motor is rotating counterclockwise as facing to the motor pulley, and on when rotating clockwise. The rotary direction has been set to counterclockwise as facing to the motor pulley, matching with the machine prior to shipping

2. Connection of control box

The control box should be connected as shown to the right.

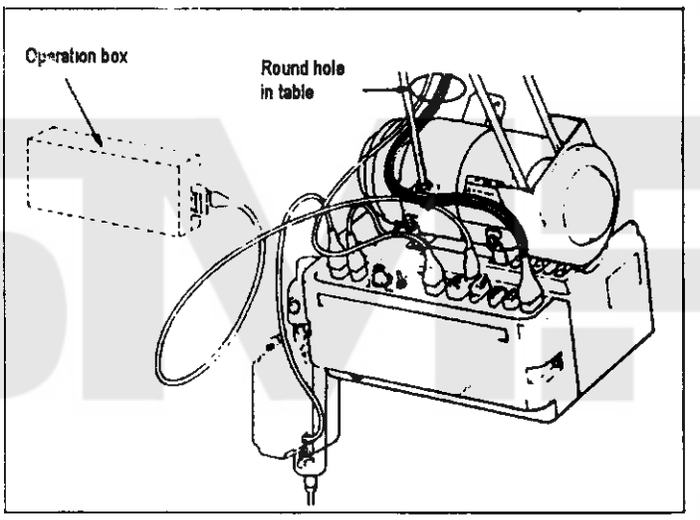

Note: (1) Be sure to turn the power switch off for safety before connecting or disconnecting the connectors.

(2) The combination of the machine heads with the motor control panels are specified below. Use special care for the correct combination when replacing the machine head or motor control panel.

3. Adjustment of needle bar stop position

1) Adjust of "UP" position

When the pedal is kicked down by heel, the machine stops at "UP" position. If the marks deviate larger than 3 mm, adjust as follows.

a) Disconnect the plug (12 pins) of cable from the machine head.

b) Run the machine and stop at "UP" position.

c) While holding the pulley, insert the "adjusting

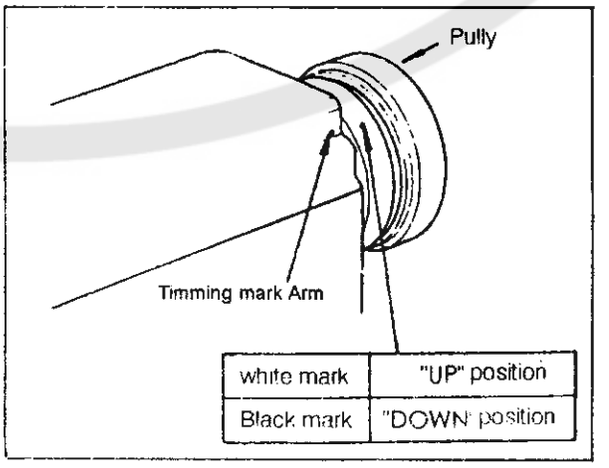

tool" in the hole" A", then remove the tool.

2) Adjust of "Down" position

When the pedal is "Neutral" the machine stops at "Down" position. If the marks deviate large than 5 mm, adjust as follows.

a) Disconnect the plug (12 pins) of cable from the machine head

b) Run the machine and stop at "Down" position.

c) While holding the pulley, insert the "adjusting tool" in the hole "B", then remove the tool.

3) Confirm the stop operation, then set the plug (12 pings) coming from the machine head into the receptacle.

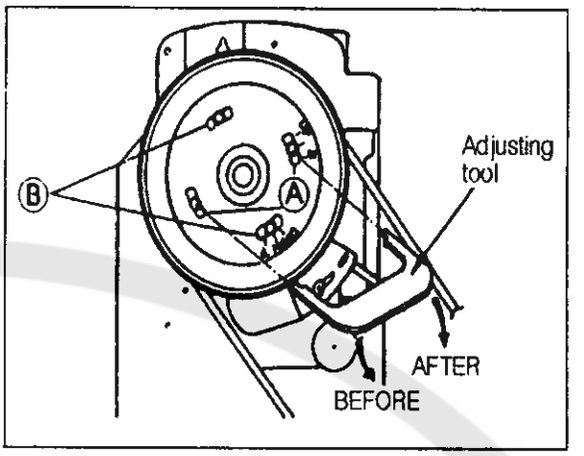

CAUTIONS ON USE

1. Oiling (1)

Fill the oil reservoir with oil up to "H" mark.

Oil level should be periodically checked. If oil level is found below "L" level replenish oil to "H" level .

For oil, Use white spindle oil1.

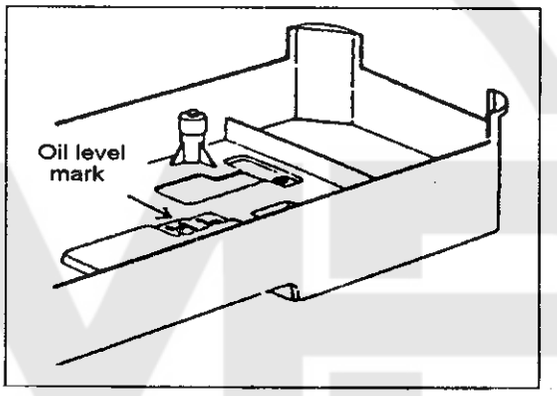

2. Oiling (2)

When a new sewing machine is used for the first time, or sewing machine left out of use for considerably long time is used again, replenish a suitable amount of oil to the portions indicated by arrow in the below figure

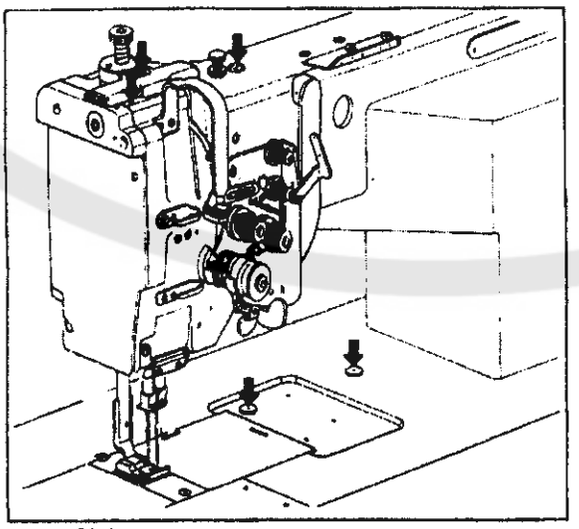

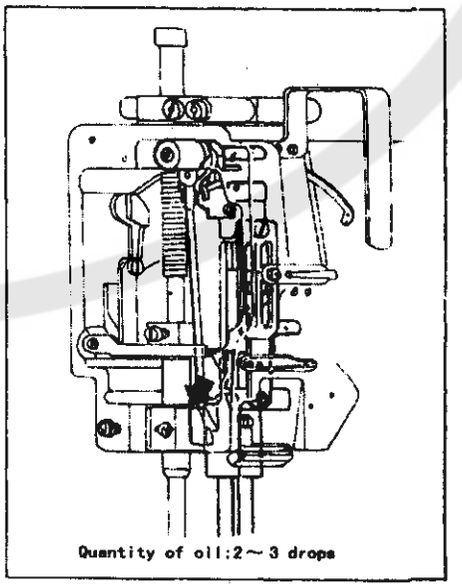

3. Oiling condition

(1) See dripping of oil during operation through the oil sight window to check oiling condition in the

machine arm.

(2) Please use the oiling adjusting screw with respect to oiling to take-up lever mechanism.

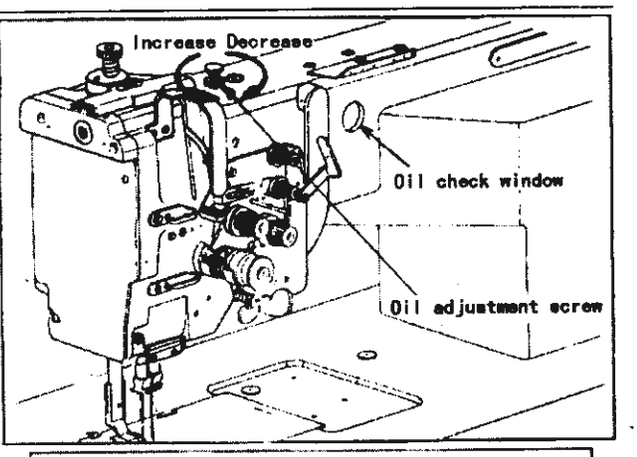

4. Adjustment of oiling to rotating hook

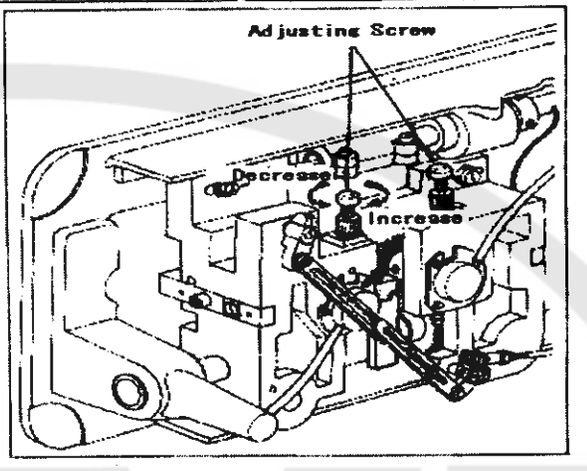

5. Cautions on operation

a) When the power is turned on or off, keep foot away from the pedal.

b) It should be noted that the brake may not work when the power is interrupted or power failure occurs during sewing machine operation.

c) Since dust in the control box might cause malfunction or control troubles, be sure to keep the control box cover close during operation.

d) Do not apply a multimeter to the control circuit for checking; otherwise voltage of multimeter might damage semiconductor components in the circuit.

OPERATION

1. Installation of needles

Note: Before installing the needles, be sure to turn off the power.

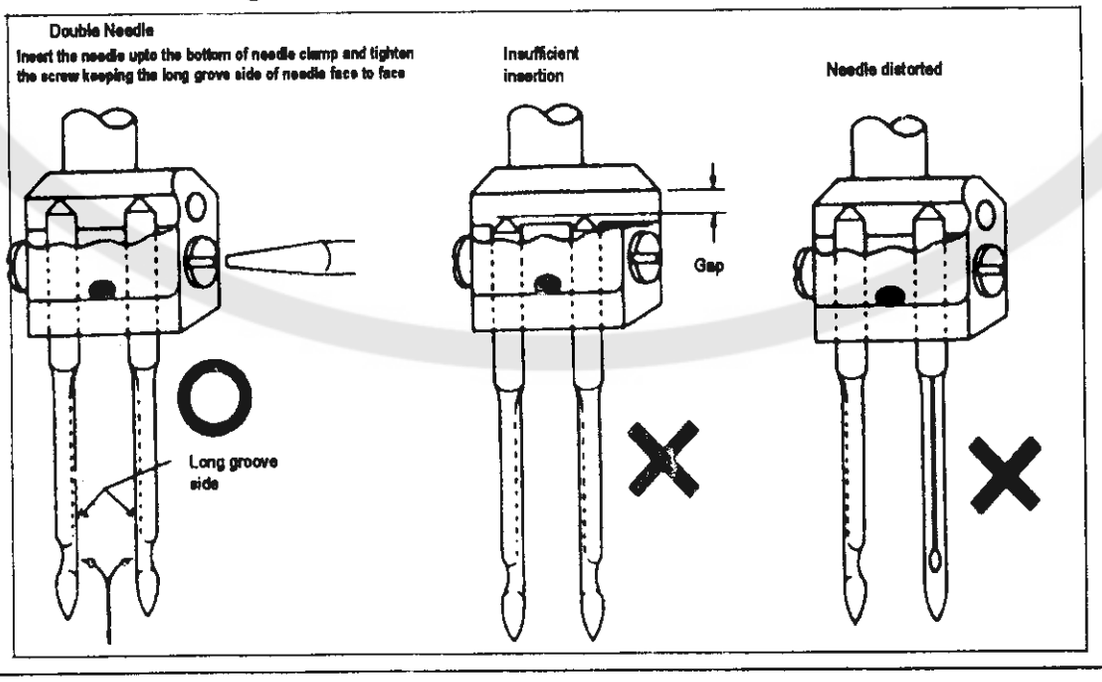

2. Winding of bobbin thread

Note: When bobbin thread is wound, keep the presser foot lifted.

Adjustment:

Tension of wound thread	• Slack winding is recommended for polyester thread and nylon thread.
Conically wound thread	Move the thread guide toward smaller diameter of wound thread layer.
Length of wound thread	Loosen the thread length adjusting screw to increase length of thread and tighten the screw to decrease length of thread.

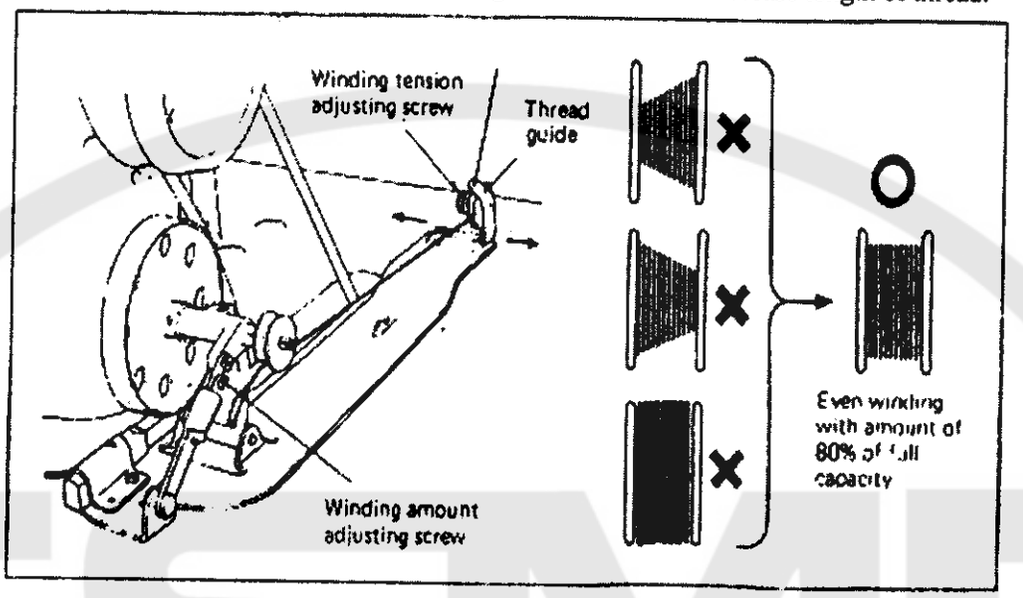

3. Selection of thread

It is recommended to use "S" twist thread in the left needle (viewed from front), and "Z' twist thread in the right needle. When discriminate use of needle threads is impossible, use "Z" twist thread in both the needles.

For bobbin thread, "S" twist thread as well as "Z" twist thread can be used.

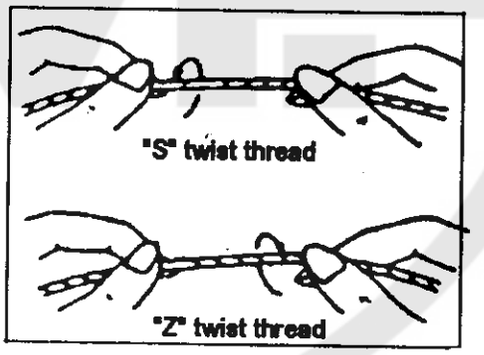

4. Threading of needle threads

a) Pass each needle thread through thread guide A

Note: When thin slippery thread (polyester Thread or filament thread, for example) is used pass the thread through thread guide B as well.

b) With the take-up lever located at the upper most position, pass each needle thread in the order shown in the following figure.

Note: Pressing the upper thread loosening button shown in the figure below opens the saucer of the upper thread tension adjuster, and the upper thread can easily pulled out.

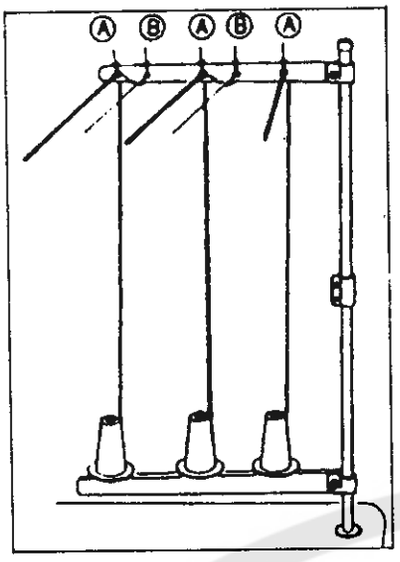

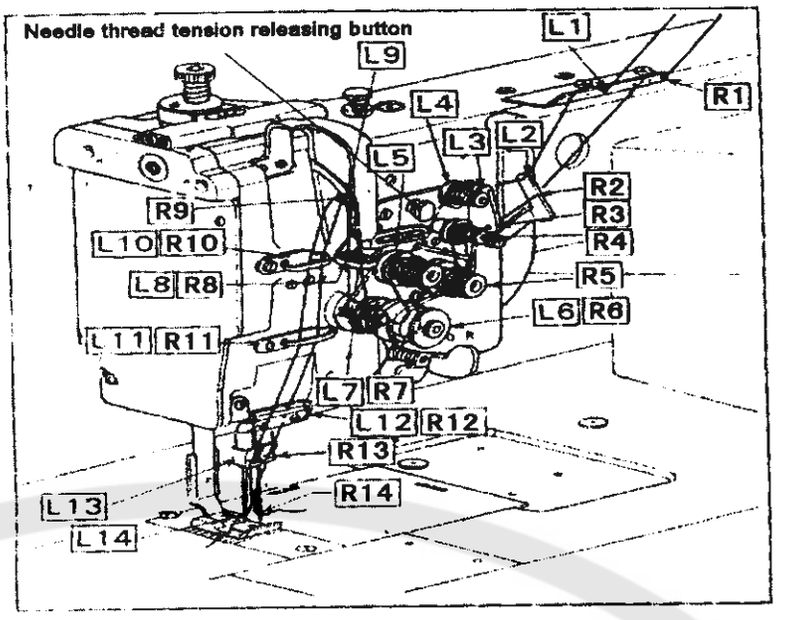

5. Adjustment of feed (stitch) length and stitch reversing (touch back)

Note: To make feed (stitch) length smaller, depress the feed reverse lever and set the feed length setting dial to a desired position

Touch-back button . . . Direction of stitching can be reversed by depressing this button.

Stitching goes on in reversed direction while the button is held down, and returns to forward direction when the button is released.

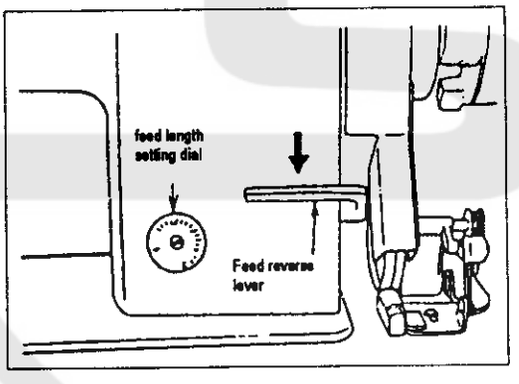

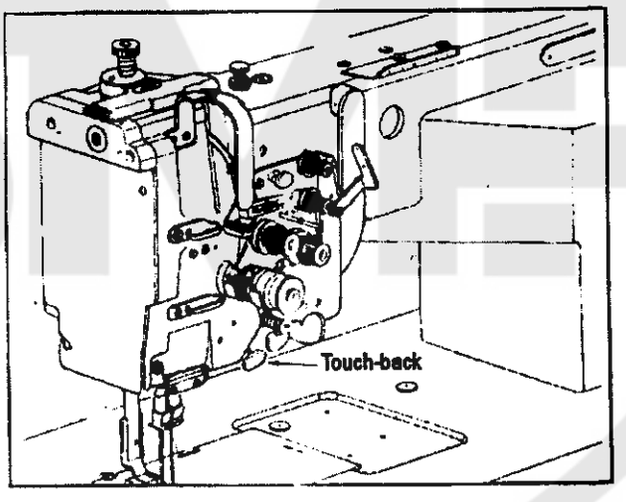

6. Setting of bobbin

leading the lower thread and install the bobbin

(1) Pulling out thread from side A, then install the bobbin case.

(2) Threading following (1)~(5)

(3) Put the bobbin case to rotating hook, then replace hook shaft.

(4) Press the bobbin bar.

(5) Leading the lower thread over bed plate.

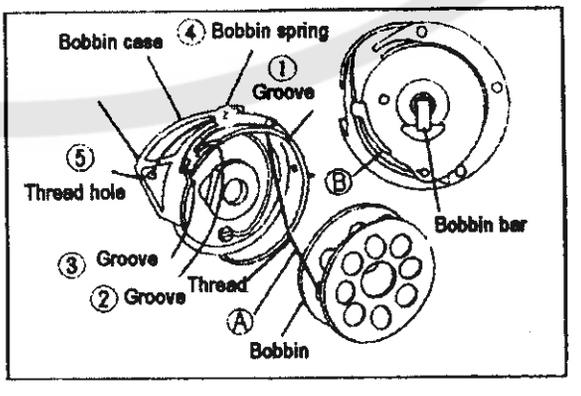

7. Adjusting of needle thread guide

Please adjust needle thread guide of needle thread tension according to sewing condition.

Thread guide position	Left	Middle	Right
Materials	The thicker then standard	L, M, B } Stand-ard	The thinner than standard
Needle thread supply	More	Standard	Less

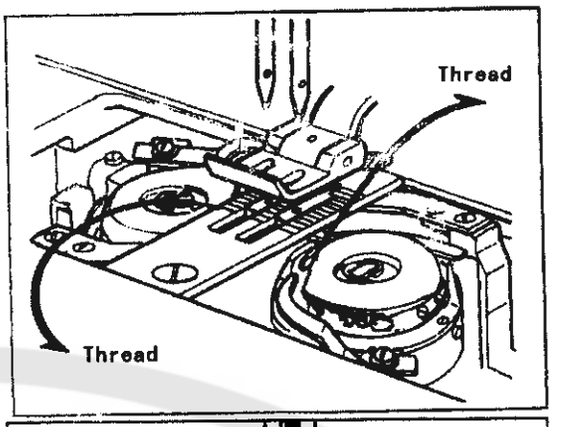

8. Threading of bobbin threads

(1) Put the hook into the bobbin case and press down the latch .
The thread end should be left on the bed.

(2) While holding the two needle thread by left hand, rotate the wheel one turn by right hand. By pulling up the needle threads, as shown in the figure, the bobbin threads will be lifted. Both of bobbin thread and needle thread should be aligned and led backward.

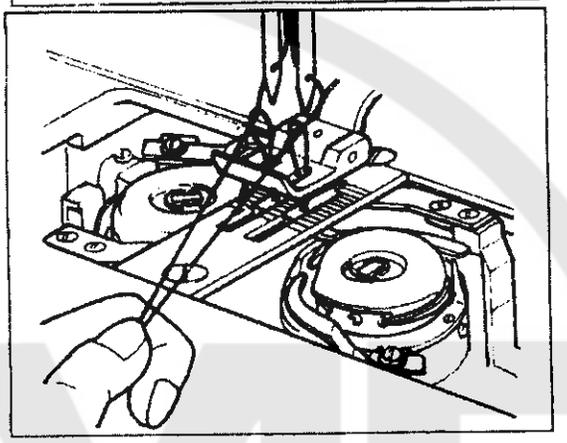

9. Tension adjustment of bobbin threads

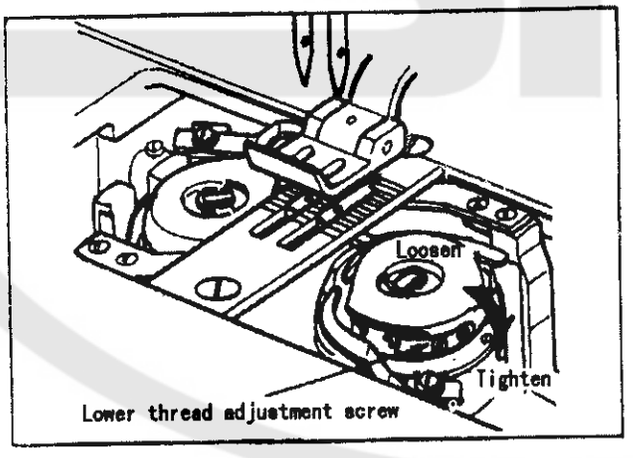

10. Balance of thread tension

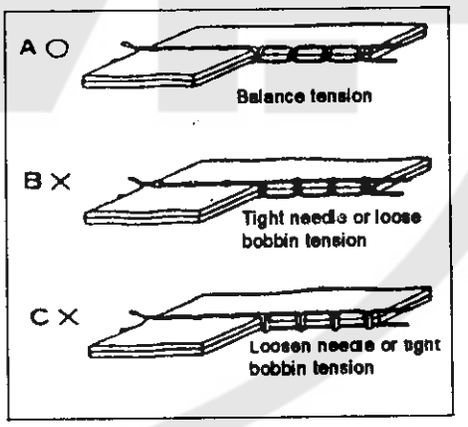

11. Needle thread tension

- Needle thread tension should be adjusted in reference to bobbin thread tension.
- To adjust needle thread tension, turn each tension adjusting nut.
- Needle thread tension can be also adjusted for special

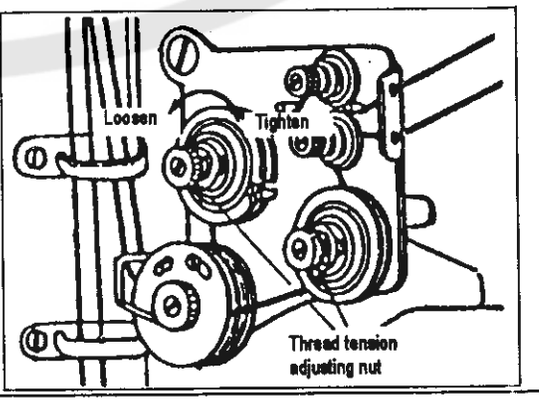

fabric and thread by changing intensity and movable range of slack thread adjusting spring.

12. Adjustment of presser foot pressure

Pressure to fabric(s) can be adjusted by turning The pressure adjusting screw.

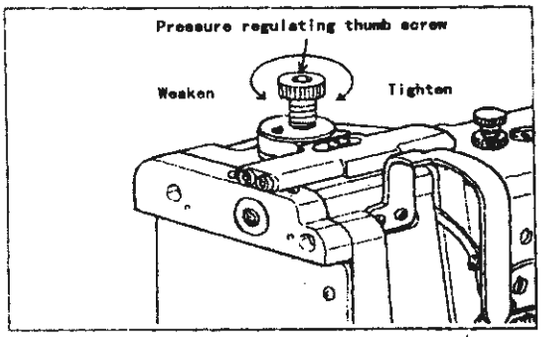

13. Timing between rotating hook motion and needle motion

(1) Set stitch length on the stitch length setting dial shown table.

Model	STANDARD HOOK	LARGE HOOK
Set the stitch length	3	4.5
Needle life A	2.2mm	2.4mm

(2) When needle is lifted **A** shown table, from the lowest positional, as shown in Figure, the following positional relationship should be maintained.

- The upper edge of needle eye should be 1.0-1.6mm below the hook point.
- The hook point should be located at the center of needle axis.
- Gap between the hook point and the side face of needle should be 0.05mm.

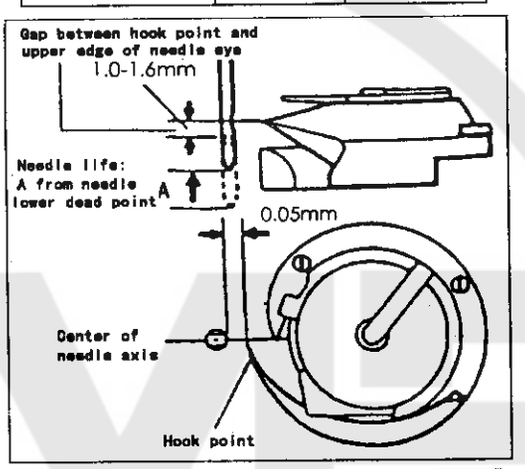

◆ Position adjustment of hook point

Adjust the hook point so that it comes to the center of needle axis.

(1) Lean the machine head backward and loosen three set screws of hook shaft gear (small)

(2) Turn the balance wheel and stop when the needle is lifted **A** mm shown table from the lowest position.

(3) Rotate the hook by hand to position the hook point to the center of needle axis.

(4) Move the hook bracket leftward or rightward and position it so that gap between the hook point and side face of needle is 0.05mm. For this adjustment, each screws **A**, **B** and two of **C** should be loosened.

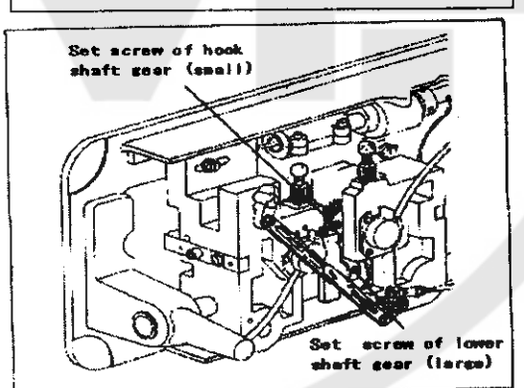

Note: In the adjustment, do not excessively loosen set screws **C** and always maintain meshing of hook shaft gear and lower shaft gear.

(5) Tighten the set screws in the following order:

a. While pressing the lower shaft gear (large) against the side face of hook bracket, tighten the set screws **C** first.

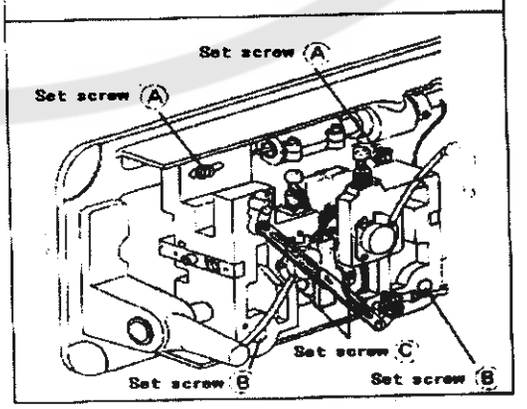

b. After checking gap between the needle and the hook, tighten the set screws **A**.

c. Then tighten the set screws **B**.

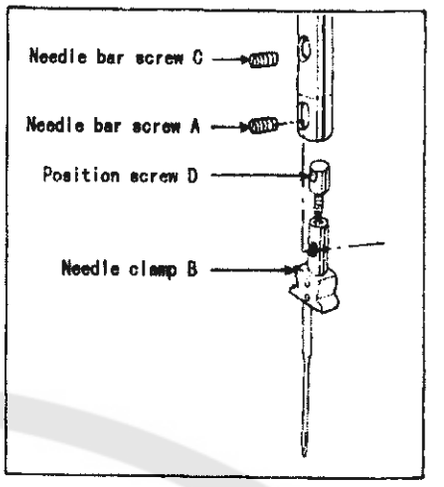

- **Position adjustment of needle point**

Adjust needle position so that gap between the upper edge of needle eye and the hook point is 1.0-1.6 mm when the needle is lifted by **A** mm from its lowest position shown in before page.

(1) Loosen the needle bar screw **A**.

(2) Rotate the needle clamp **B** one circuit (amount of Adjustment is 0.6mm), or loosen the needle bar screw **C**, rotate position screw **D** half a circuit (amount of adjustment is 0.3mm).

(3) Be sure to mark the needle clamp facing left side, Tighten needle bar screw **C** and **A**.

14. Needle bar stop position (left & right)

Note: The stopper wrench can be operated while the sewing Machine running, but the best way is to adjust while Take-up lever stopping at its highest position.

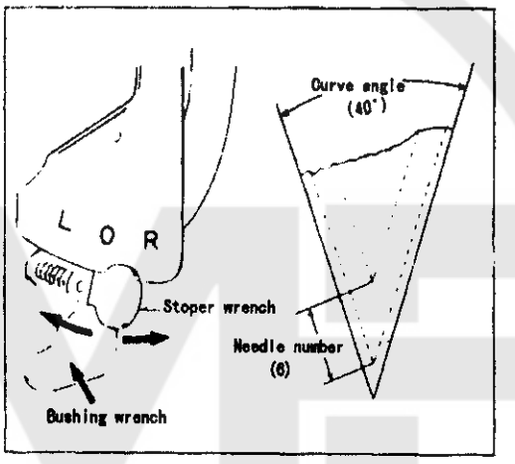

(1) Stop the motion of left-side needle bar:
Make the stopper wrench to the position L.

(2) Stop the motion of right-side needle bar:
Make the stopper wrench to the position R.

(3) Two needles running at the same time:
Press down restore plate, stopper wrench restore to O position automatically.

15. Relations between curve angle and stitch length

(1) Determine the stitch length according to the form to obtain various.

(2) The needle number of another outside needle can be obtained while the angle be determined.

(3) Example: While the angle is 40°, if the stitch is 2.9mm, then the outside needle number is 6.

The relations between needle stitch and needle number (while the gap between two needles is 1/4)

needle number / curve angle	2	3	4	5	6	7	8
30°				4.8	4.0	3.7	3.0
40°			4.4	3.5	2.9	2.5	2.2
50°		4.6	3.4	2.7	2.3	2.0	1.7
60°	5.5	3.7	2.8	2.2	1.9	1.6	
70°	4.6	3.0	2.3	1.8	1.5		
80°	3.8	2.5	1.9	1.5	1.3		
90°	3.2	2.1	1.6	1.3			
100°	2.7	1.8	1.3				
110°	2.2	1.5					
120°	1.8	1.2					
130°	1.5						
140°	1.1						

16. Adjustment of feed dog height

Height of feed dog and pressure of presser foot should be adjusted for individual fabric(s) with the following cautions:

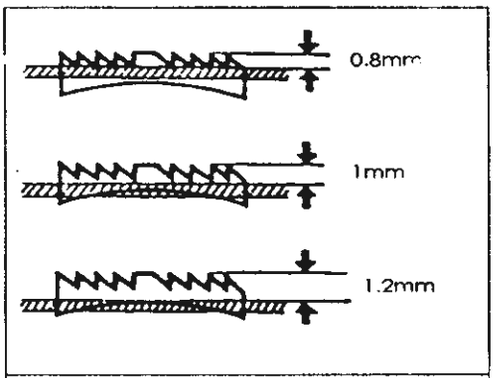

- Fabric will be damaged if the feed dog extends too high, or pressure of presser foot is too large.
- Even stitch length cannot be assured if the feed dog is too low or pressure of presser foot is too small.
- Feed dog height should be measured at the point where the needle is at the top position.

For light fabrics····· Approx. 0.8mm from throat plate
For usual fabrics·····Approx. 1.0mm from throat plate
For heavy fabrics·····Approx. 1.2mm from throat plate

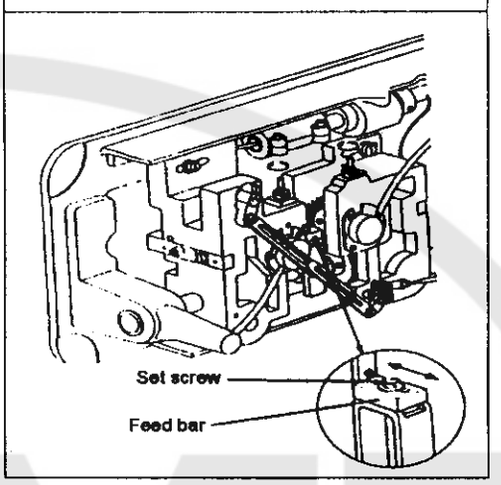

Adjustment procedure

a) Lean the machine head backward.
b) Turn the hand wheel by hand and stop when the Feed dog rises to the maximum height.
c) Loosen the feed bar set screw.
d) Vertically move the feed bar (in the direction indicated by arrow in the figure) to adjust it to adequate height.
e) After the adjustment, tighten the feed bar set screw.

- **The feed dog height is factory-adjusted to 1.0mm**

17. Relationship between rotating hook motion and take-up lever motion

When the timing belt (toothed belt) was removed for its replacement, for example, the relationship between rotating hook motion and take-up lever motion should be adjusted as follows:

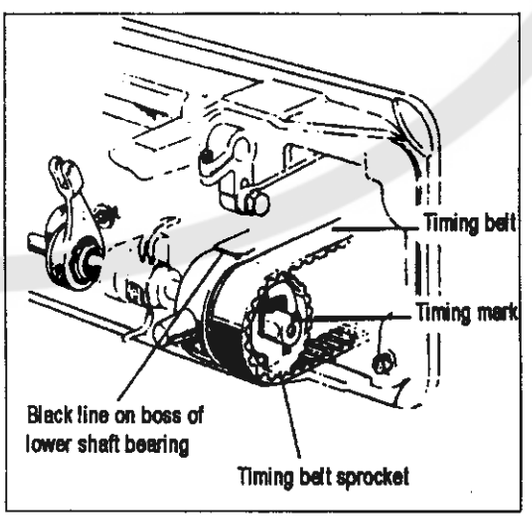

a) Turn the balance wheel and stop when the take-up lever is lifted to its top position.
b) Lean the machine head backward and make sure the arrow (timing mark) put on the timing belt is in line with the black line on the boss of hook shaft bearing.
c) If the timing mark is not in line with the black line , remove the timing belt and install it again to adjust.

18. Relationship between hook motion and opener motion

a) Turn the balance wheel by hand and stop when the opener holder is located most remotely from the throat plate.

b) Make sure gap between the bobbin case holder **A** and the opener is approximately 0.2mm.

c) If the gap is too large or small , loosen the opener set screw **B** and adjust position of the opener.

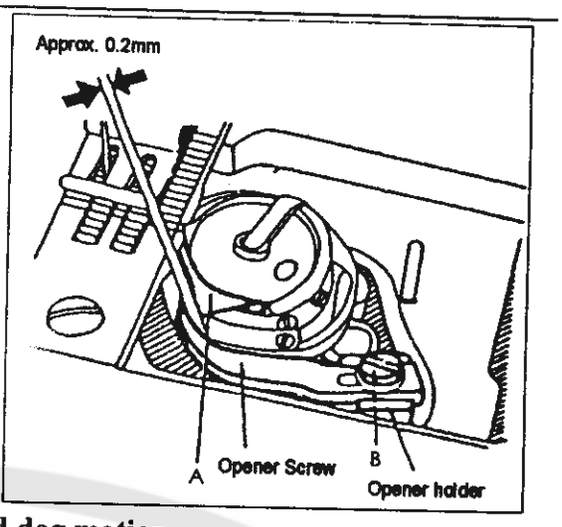

19. Relationship between needle motion and feed dog motion

- The feet dog should be adjusted so that the needle can plunge into the feed dog needle hole at the center of the hole.

(1) Set stitch length to "0" on the stitch length setting dial

(2) Lean the machine head backward.

(3) Loosen the feed shaft crank set Screws **A** and **B**

(4) Set the needle at the lowest position.

(5) Adjust the distance between the pressure bar and the needle bar to be 13.5, and tentatively tighten the screws **A** and **B** of the feed shaft crank.

(6) Check that the right feed shaft crank is connected with the link at right angle, as shown in Figure.

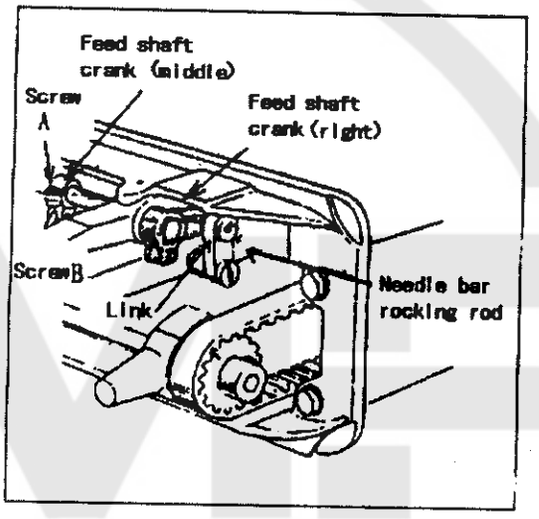

(7) If the connection is not at right angle, remove the back cover, loosen screw **C** and move the needle bar rocking rod in the arrow direction to adjust.

(8) After the completion of adjustment, fully tighten the screws **A** , **B** and **C**.

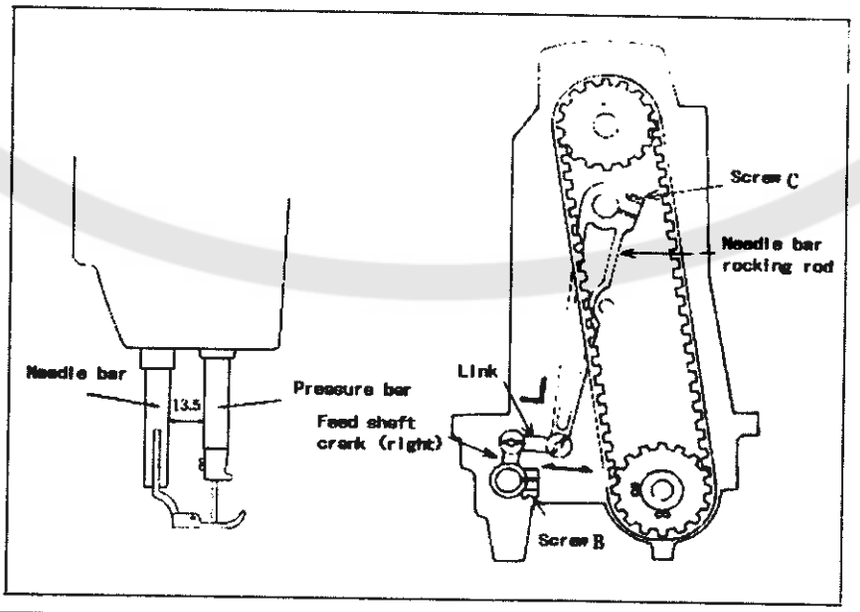

20. Installation of movable knife

(1) Initial position of movable knife

a. Turn the balance wheel and lower the needle bar to the lowest position.

b. Push the cam follower crank so that the cam roller enters into the thread trimmer cam groove.

c. Turn the balance wheel until the black mark point on the arm meets the white mark point on the balance wheel.

d. Set the cam follower crank at this position with a screwdriver temporarily preventing the cam roller coming out from the cam groove.

e. Loosen the thread trimmer rocking crank clamp bolts **A** and **B**.

f. Adjust the movable knife so that the movable knife end slant portion protrudes 0-0.5 mm from the fixed knife, as shown in Figure and tighten the bolts **A** and **B**.

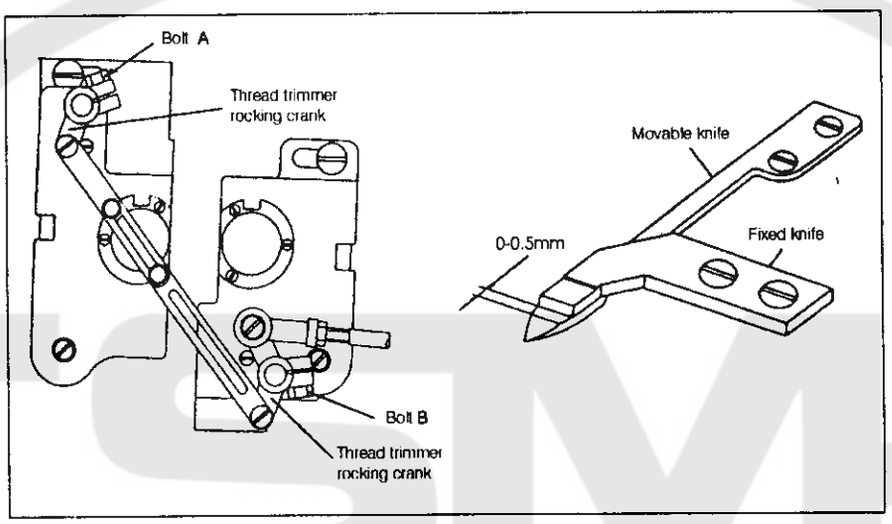

(2) Gap between movable knife and bobbin case holder stopper

a. Turn the balance wheel by hand until needle reaches the lowest position.

b. With the needle at the lowest position, depress cam follower crank, turn the balance wheel until the movable knife reaches the extremity of its stroke.

c. Manually rotate the inner hook in the direction indicated by arrow in Figure and adjust gap between the movable knife and the inner hook stopper to about 0.2 mm (the screws A and B should be loosened for this adjustment).

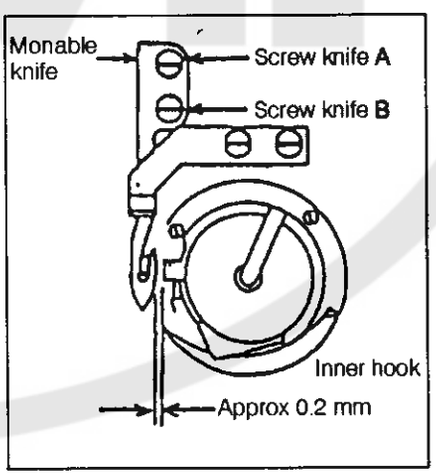

21. Adjustment of thread trimmer cam

a. Turn the balance wheel by hand until the needles reach the lowest position.

b. Maintaining the needle position, depress the cam follower crank and put the cam roller into the groove of thread trimmer cam.

c. Turning the balance wheel by hand, adjust the thread trimmer cam so that the movable knife starts moving when the green mark point on the balance wheel comes in line with the black mark point on the arm. ※ To adjust, loosen two thread trimmer cam clamp screws **A**.

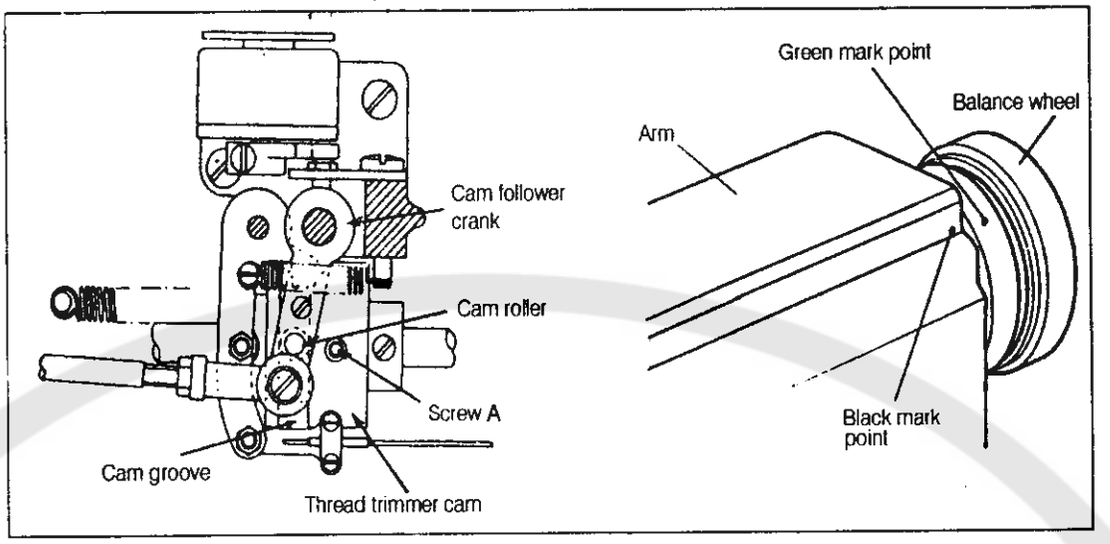

22. Adjustment of needle threads tension release assembly

a. Turn the balance wheel by hand until the needles reach the lowest position.

b. Maintaining the needle position, depress the cam follower crank and put the cam roller into the groove of thread trimmer cam.

c. Turning the balance wheel by hand, adjust the thread tension release cam so that the tension disc close when the white mark point on the balance wheel comes in line with the black mark point on the arm.
To adjust, loosen two tension release cam clamp screws **A**.

d. Opening degree of tension disc should be adjusted with the tension release roller **B** mounted on the convex portion of thread release cam, as shown in Fig.
To adjust, loosen the screws **C** and draw the wire.

e. Make fine adjustment by loosening the nut **D**.

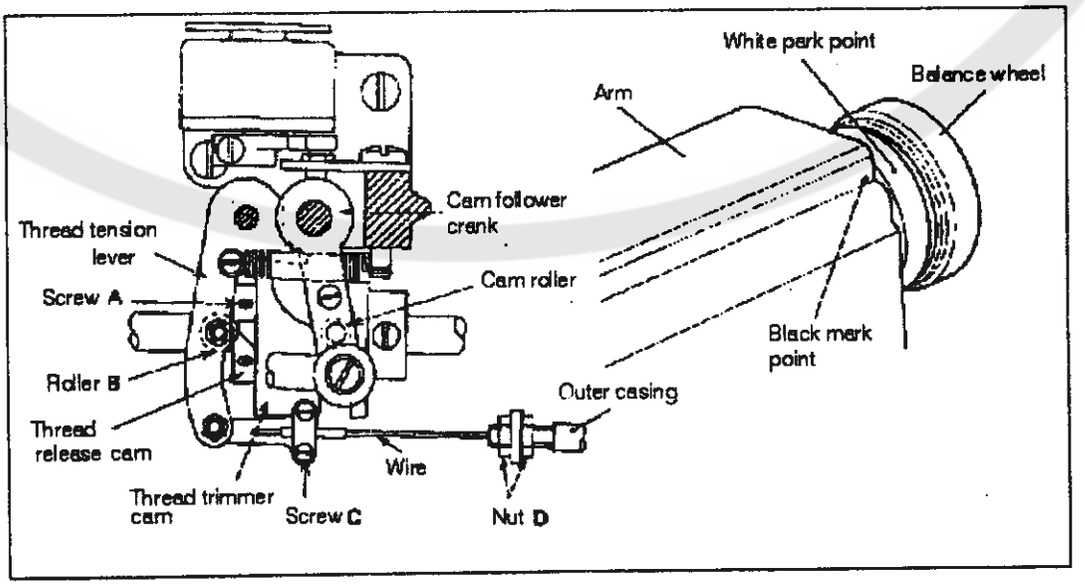

23. Adjustment of meshing pressure of movable knife and fixed knife

a. Loosen the fixed knife bracket clamp bolt **A**.

b. Turn the vertical position adjusting screw **B** to adjust meshing pressure and then righter the hexagon socket head cap screw **A**.

Note: Since excess pressure causes large torque to the thread trimming mechanism and trimming failure, adjust it so that thread can be trimmed with minimum pressure.

c. Move the movable knife and check that the thread can be sharply trimmed.

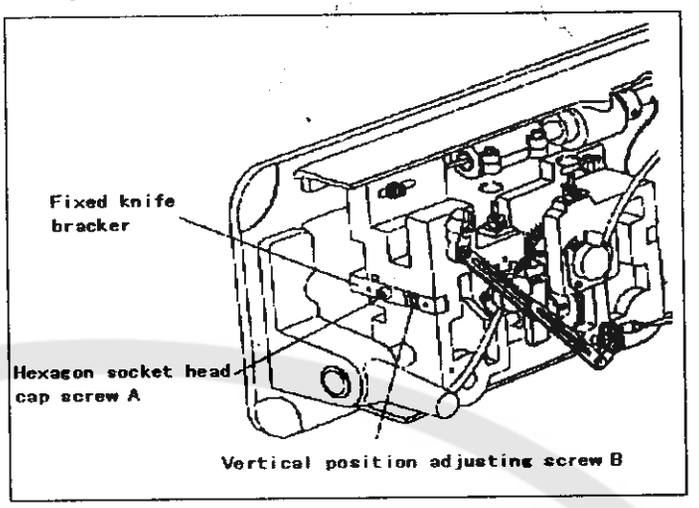

24. Sharpening of fixed knife

When the knives dull, the fixed should be sharpened as illustrated in Fig.

Since it is very difficult to sharpen the movable knife, replace it with a new one when it dulls.

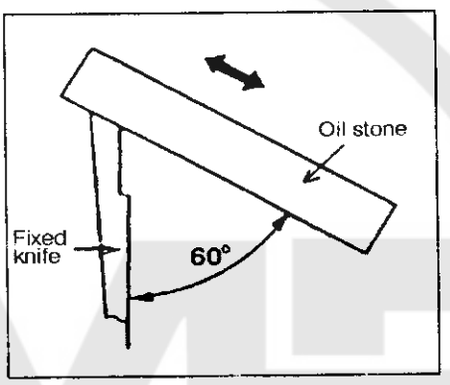

25. Adjustment for change of needle gage

(1) Replace the throat plate, feed dog and needle clamp.
(Since the throat plate and feed dog are special parts designed for thread trimming machine, be sure to use those specified by us.)

(2) Lean the machine head backward.

(3) Loosen two connecting link clamp bolts **J**.

(4) Remove the spring **M**.

(5) Loosen the hook bracket clamp screws **A** and **B** and adjust gap between each needle and hook.

(6) When the needles and hooks have been adjusted, install the spring **M**.

(7) Contact the rocking cranks **C** and **D** to the stopper pins **E** and **F** and tighten the connecting link clamp bolt **J**.

(8) Turn the balance wheel by band until the needles reach the lowest position.

(9) Loosen the nuts **G** and **H**.

(10) Depress the cam follower crank **K** and adjust the connecting rod **L** so that the cam roller can smoothly enter the groove of thread trimmer cam.. Then tighten the nuts **G** and **H** .

(11) Adjustment of the cam groove and the cam roller

i. Push the cam follower crank **K** so that the cam roller enters into the cam groove.

ii. Turn the connecting rod L and adjust the clearance between the cam roller and the cam

groove surface **N** as small as possible, and tighten the nuts **G** and **H**.

iii. Push the cam follower crank **K** again and check that the cam roller enters into the thread trimmer cam groove smoothly.

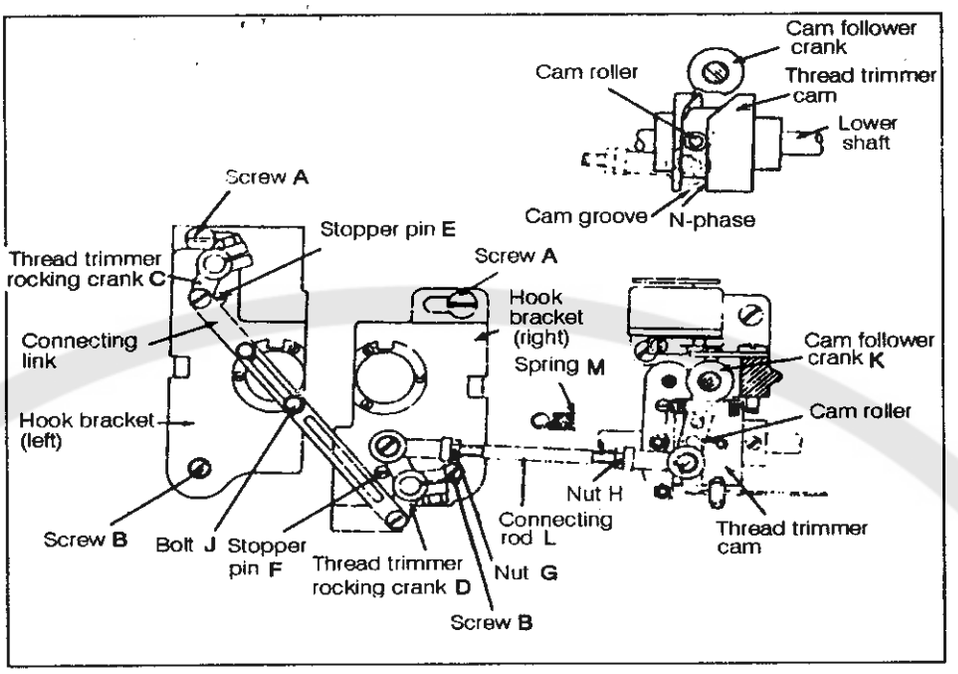

26. Wiper adjustment

a) Run the machine then stop at "up" position.

b) Loosen the screw **C** ,then adjust the base block so that the line **A** and the line **B** are the same plane, then tighten the screw **C**.

c). Loosen the screw **F**, then adjust the wiper move so as the **E** clearance is 2mm, then Tighten the screw **F**.

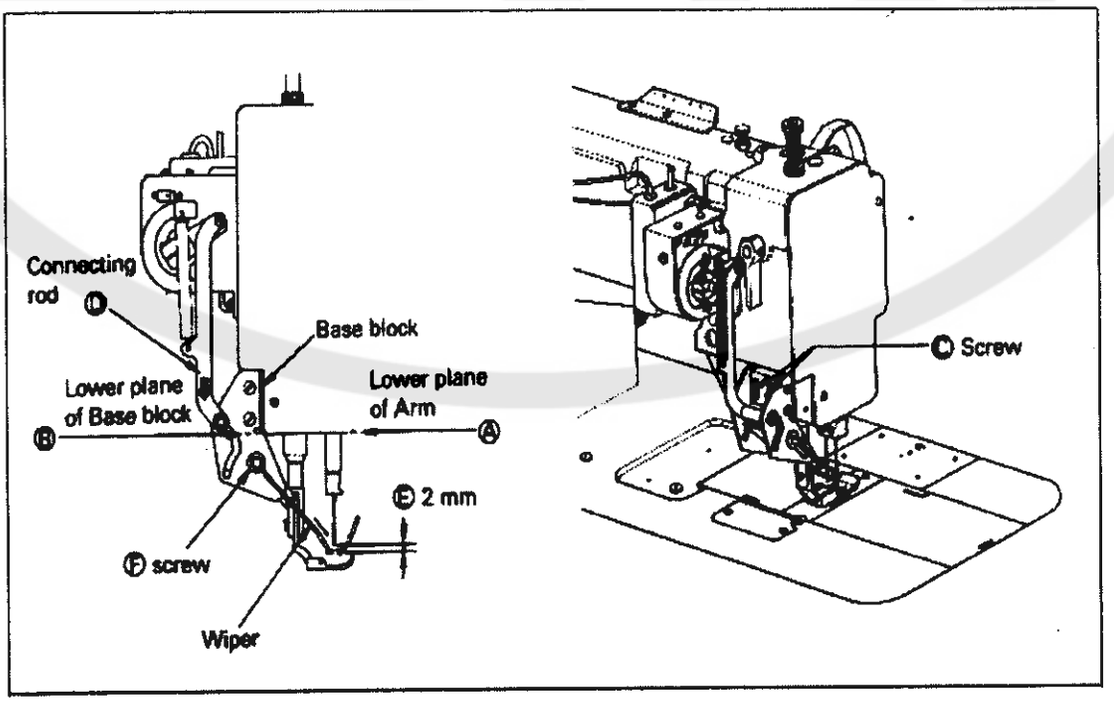

SPECIFICATIONS

Model	DN-2220	DN-2220-AUT	DN-2220/LH	DN-2220/LH-AUT
Application	Light to medium heavy material		Medium heavy material	
Max. sewing speed	3500rpm		3000rpm	
Stitch length	0～5mm		0～7mm	
Needle-bar stroke	32mm			
Presser-foot stroke	13mm by Leg 7mm by hand			
Needle No.	DP×5 11#-14#		DP×5 18#-22#	
Rotating hook	Standard vertical-axis hook with self-lubrication	Auto lubrication hook (Thread trimming)	Large hook with bobbin thread pull-back	(Horizontal full-rotating) Large
Auto trimmer	——	√	——	√
Thread take-up lever	Slide lever			
Stitch adjusting system	Dial			
Lubrication system	Automatic lubrication			
Motor	Clutch motor 370W	Servo motor 550W	Clutch motor 370W	Servo motor 550W
Needle gauge Standard	6.4mm			
Needle gauge Special	3.2 4.8 8 9.5 12.7mm			

A. ARM BED AND ITS ACCESSORIES

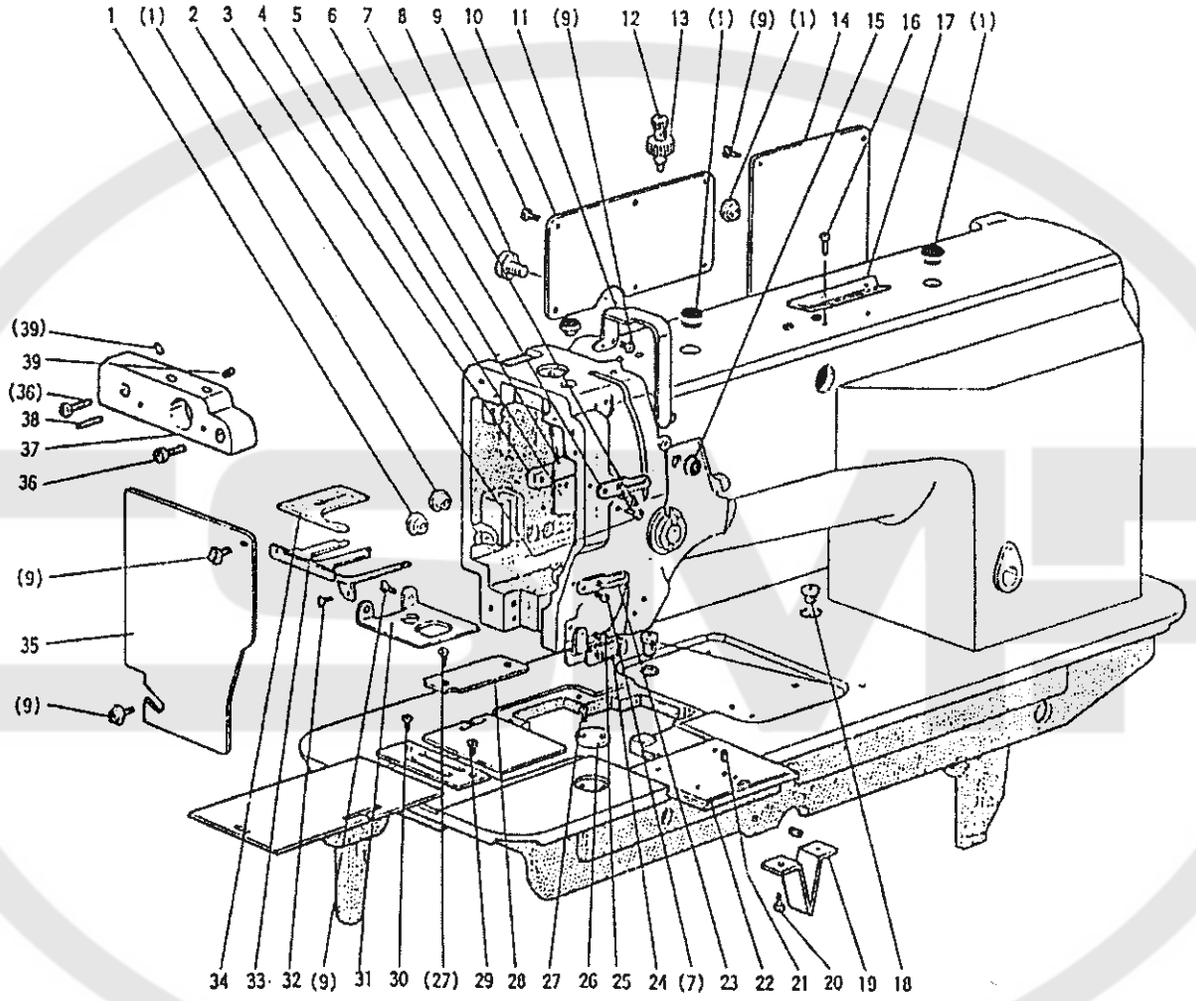

A.ARM BED AND ITS ACCESSORIES

Fig. No.	Part No.	Description	2220	2220/LH	2220-AUT	2220/LH-AUT	Remarks
A01	H3200B2190	Rubber plug	5	5			black
A01	H4715B8001	Rubber plug			5	5	gray
A02	H2400B2080	Screw	2	2	2	2	SM3/16 (28) ×11
A03	H2400B2060	Spacer	1	1	1	1	
A04	H3200B2060	Oil guard plate	1	1	1	1	
A05	H2400B2050	Oil guard plate	1	1	1	1	
A06	H3200B2070	Thread guide	1	1	1	1	
A07	H3000D2160	Screw	2	2	2	2	SM9/64 (40) ×6.5
A08	H409060080	Screw	1	1	1	1	GB/T818 M6×8
A09	HA300C2030	Screw	15	15	11	11	SM11/64 (40) ×8
A10	H3200B2030	Side cover (left)	1	1	1	1	
A11	H3200B2050	Thread take-up cover	1	1			black
A11	H4717B8001	Thread take-up cover			1	1	gray
A12	H3200K0210	Thumb screw	1	1	1	1	M10×33
A13	H3200K0220	Special nut	1	1	1	1	M10×8.5
A14	H3200B2040	Side cover (right)	1	1	1	1	
A15	H2000B2010	Rubber plug	1	1	1	1	
A16	HA700B2060	Screw	2	2	2	2	SM11/64 (40) ×8
A17	H2400B2100	Thread guide	1	1	1	1	
A18	H2000M0080	Cap	2	2	2	2	
A19	H4913B8001	Supporter			1	1	
A20	H4912B8001	Screw			2	2	SM1/4 (24) ×9
A21	H3200B2170	Screw	1	1	1	1	SM13/64(32)×4
A22	H3200B2160	Slide plate	1	1	1	1	
A23	H3200B2080	Thread guide (middle)	1	1	1	1	
A24	H3212B0066	Thread guide (complete)	1	1	1	1	
A25	H3200B2100	Screw			1	1	SM9/64(40)×6.5
A26	H4915B8001	Cover			1	1	
A27	H4914B8001	Screw			4	4	SM9/64(40)×6
A28	H4911B8001	Cover			1	1	
A29	HA300B2190	Screw	1	1	1	1	SM11/64 (40) ×8
A30	H3200B2120	Screw	1	1	1	1	SM9/64 (36) ×6.5
A31	H3400K0020	Cover	1	1	1	1	
A32	H2004J0067	Screw	2	2	2	2	SM9/64 (40) ×7
A33	H3406K0651	Oil guard plate	1	1	1	1	
A34	H3406K0652	Felt	1	1	1	1	
A35	H3400L0030	Face plate	1	1			black
A35	H3406L0065	Face plate			1	1	gray
A36	HA7311C606	Screw	2	2	2	2	SM11/64 (40) ×12
A37	H3400L0070	Shaft supporter	1	1			
A37	H3410L0065	Shaft supporter			1	1	
A38	H602030200	Pin	2	2	2	2	GB/T117 3×20
A39	H2000I2080	Screw	1	1	1	1	SM11/64 (40) ×8

B. THREAD TENSION REGULATOR MECHANISM

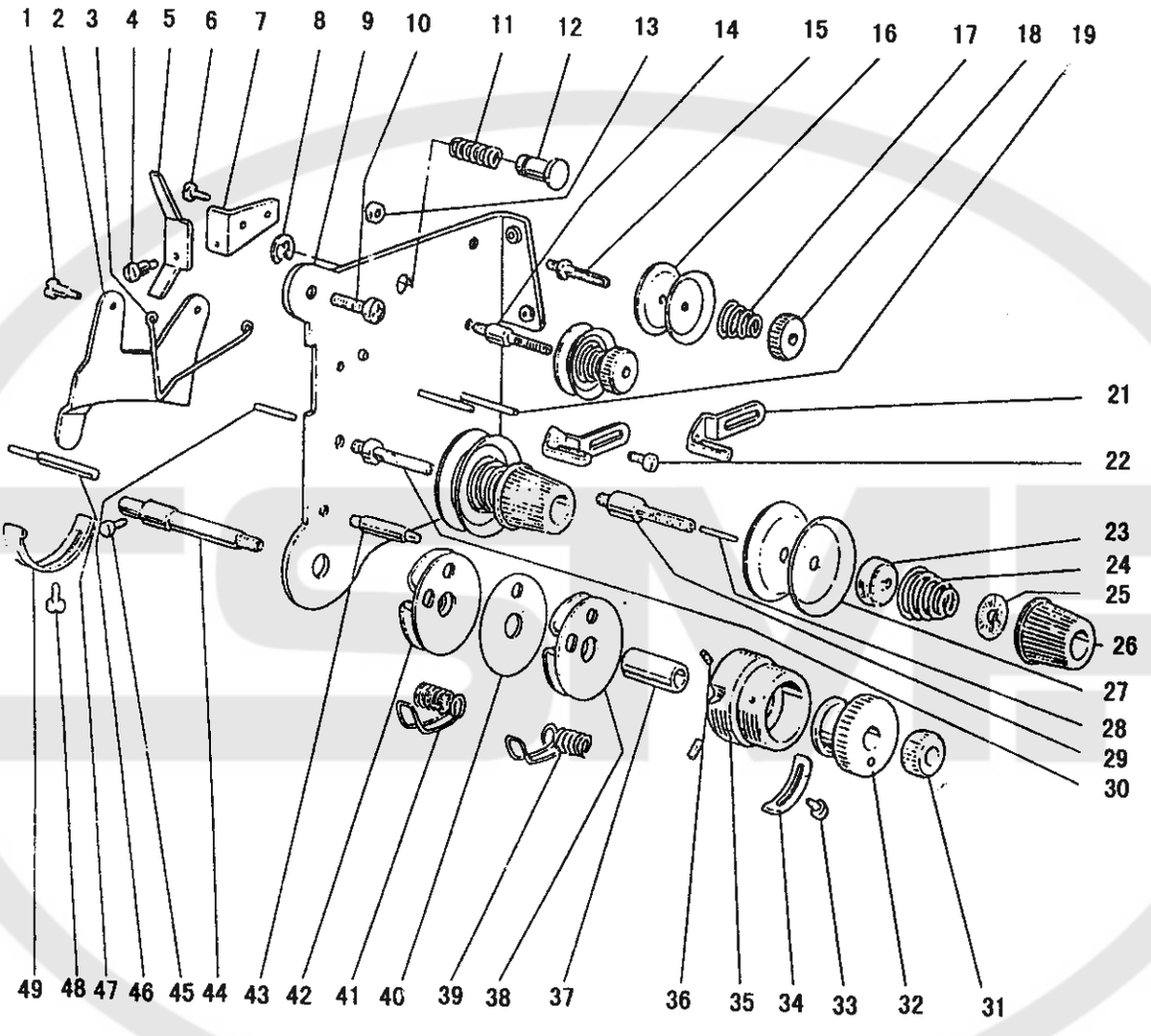

B.THREAD TENSION REGULATOR MECHANISM

Fig. No.	Part No.	Description	2220	2220/LH	2220-AUT	2220/LH-AUT	Remarks
B01	H3221B6811	Screw	2	2	2	2	SM9/64 (40) ×3
B02	H3221B3142	Tension releasing plate	1	1	1	1	
B03	H3221B6812	Tension releasing spring	1	1	1	1	
B04	H4705C8001	Screw			1	1	SM9/64 (40) ×4.2
B05	H4706C8001	Lever			1	1	
B06	HA7311C306	Screw			1	1	SM9/64 (40) ×4.5
B07	H4707C8001	Mounting plate			1	1	
B08	H007013050	Stop ring			1	1	GB/T896 5
B09	H3221B6820	Mounting plate	1	1	1	1	
B10	HA300C2030	Screw	2	2	2	2	
B11	H4708C8001	Spring			1	1	
B12	H4709C8001	Push button			1	1	
B13	H3221B6810	Nut	2	2	2	2	SM11/64 (40)
B14	H3221B0685	Thread tension stud	1	1	1	1	
B15	H3221B0683	Thread tension stud	1	1	1	1	
B16	HA112B0693	Thread tension disk	4	4	4	4	
B17	H3221B0684	Thread tension spring	2	2	2	2	
B18	HA710B0671	Thumb nut	2	2	2	2	SM11/64 (40)
B19	H3221B0682	Pin	3	3	3	3	
B21	H3221B0687	Thread guide	1		1		
B21	H3306B0661	Thread guide		1		1	
B22	HA106B0676	Screw	1	1	1	1	SM9/64 (40) ×6
B23	HA310B0702	Thread tension releasing plate	2	2	2	2	
B24	HA115B0703	Thread tension spring	1		1		
B24	H3300B2040	Thread tension spring		1		1	
B25	HA115B7010	Thumb nut revolution stopper	2	2	2	2	
B26	HA310B0701	Thumb nut complete	2	2	2	2	
B27	HA310B0705	Thread tension disk	4	4	4	4	
B28	H3221B6816	Pin	1	1	1	1	
B29	H3221B0689	Thread tension stud	1	1	1	1	
B30	H3221B0686	Thread tension stud	1	1	1	1	
B31	H32481B721	Thumb nut	1	1	1	1	SM1/4 (40)
B32	H32481B621	Take-up spring guide	1	1	1	1	
B33	H32481BC21	Screw	1	1	1	1	SM9/64 (40) ×6
B34	H32481BB21	Stopper	1	1	1	1	
B35	H32481B921	Thread tension post	1	1	1	1	
B36	H32481B521	Screw	2	2	2	2	SM1/8 (44) ×3.9
B37	H32481B821	Bushing	1	1	1	1	
B38	H32481BF21	Plate complete	1	1	1	1	
B39	H32481B321	Thread take-up spring	1	1	1	1	
B40	H32481BE21	Plate	1	1	1	1	
B41	H32481B221	Thread take-up spring	1	1	1	1	
B42	H32481BD21	Plate complete	1	1	1	1	

B.THREAD TENSION REGULATOR MECHANISM

Fig. No.	Part No.	Description	2220	2220/LH	2220-AUT	2220/LH-AUT	Remarks
B43	H32481B421	Screw	1	1	1	1	SM9/64 (40) ×2.9
B44	H32481B121	Thread tension stud	1	1	1	1	
B45	H2004J0067	Screw	1	1	1	1	SM9/64 (40) ×7
B46	H3221B6817	Pin	1	1	1	1	
B47	H3221B6818	Tension releasing pin	1	1	1	1	
B48	H3200B2100	Screw	1	1	1	1	SM9/64 (40) ×6.5
B49	H3221B6819	Stopper	1	1	1	1	

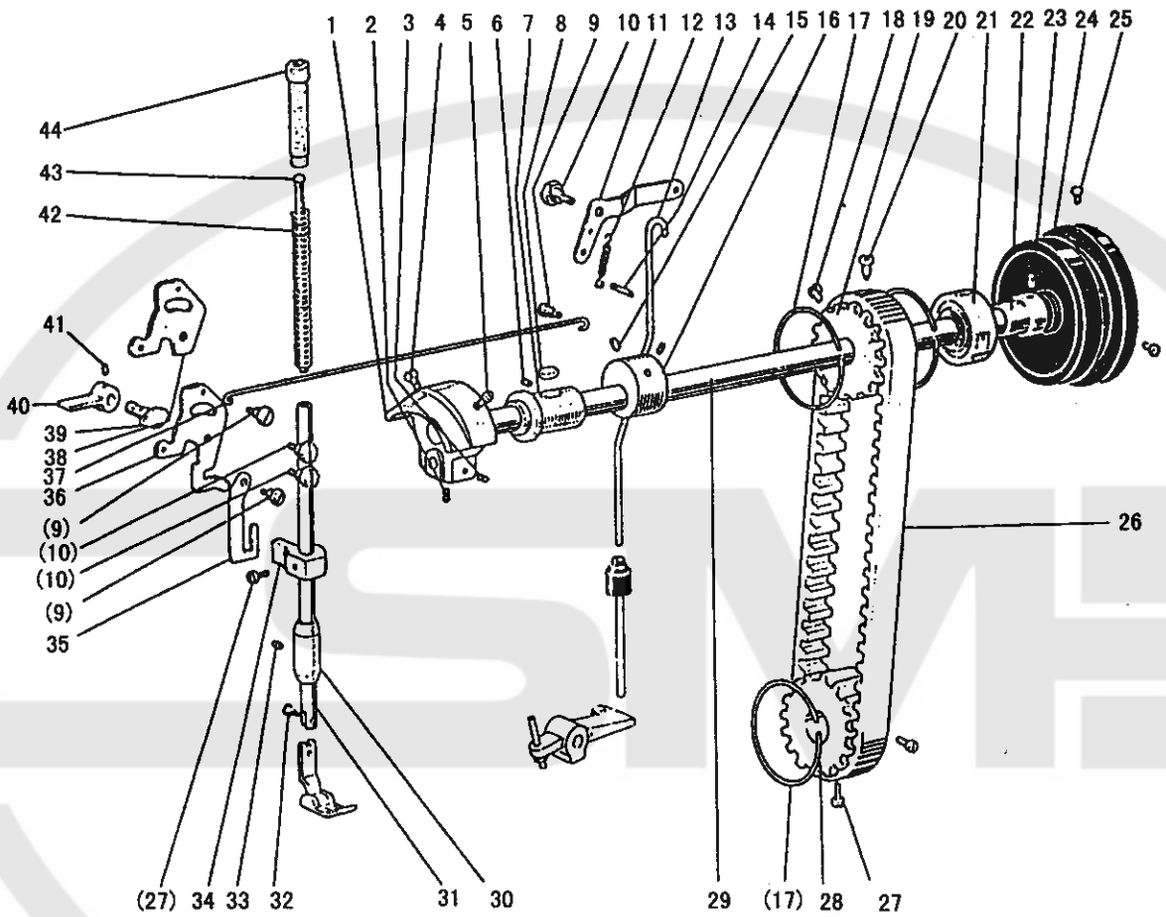
1 2 3 4 5 6 7 8 9 10 11 12 13 14 15 16 17 18 19 20 21 22 23 24 25
44
43
42
41
40
39
38
37
36
(9)
(10)
(10)
(9)
35
26
(27) 34 33 32 31 30 29 (17) 28 27

C.ARM SHAFT MECHANISM

Fig. No.	Part No.	Description	2220	2220/LH	2220-AUT	2220/LH-AUT	Remarks
C01	H3404B0011	Crank	1	1	1	1	
C02	HA105D0662	Screw	1	1	1	1	SM1/4 (40) ×3.5
C03	HA307C0662	Set screw	1	1	1	1	SM1/4 (40) ×7
C04	HA100C2060	Screw	1	1	1	1	SM9/32 (28) ×14
C05	HA100C2070	Screw	1	1	1	1	SM9/32 (28) ×13
C06	H2405D0664	Set screw	1	1	1	1	SM15/64 (28) ×14
C07	H3204B0011	Arm shaft bushing (left)	1	1	1	1	
C08	H32111B104	Felt	1	1	1	1	
C09	HA107H0662	Screw	3	3	3	3	SM3/16 (28) ×3.5
C10	HA100H2050	Bolt	3	3	3	3	SM15/64 (28) ×6.7
C11	H3211E0691	Knee lifter lever (right)	1	1	1	1	
C12	H3211E0692	Spring	1	1	1	1	
C13	H3211E0693	Knee lifter connecting rod	1	1	1	1	
C14	H3200E2090	Pin	1	1	1	1	φ5×28
C15	HA100C2020	Screw	2	2	2	2	SM15/64 (28) ×10
C16	H3406B0671	Blance weight			1	1	
C17	H3205C0661	Spring flange	3	3	3	3	
C18	HA113F0684	Screw	1	1	1	1	SM15/64 (28) ×8.5
C19	H3205C1021	Pulley(upper)	1	1	1	1	
C20	HA100F2130	Screw	1	1	1	1	SM15/64 (28) ×14.5
C21	H3205J0662	Ball bearing	1	1			6204ZZNR/5K
C22	H3205J0661	Bushing	1	1			
C23	HA113F0684	Screw	2	2			SM15/64 (28) ×8.5
C24	H3204J0652	Pulley	1	1			
C25	HA110D0672	Screw	2	2			SM15/64 (28) ×12
C26	H3200C2030	Cog belt	1	1	1	1	
C27	HA104F0654	Screw	3	3	3	3	SM15/64 (28) ×10
C28	H3207C0671	Pulley(lower)	1	1	1	1	
C29	H3204C0651	Arm shaft	1	1			
C29	H6906D8001	Arm shaft			1	1	
C30	HA704B0651	Bushing	1	1	1	1	
C31	H3200E2010	Presser bar	1	1	1	1	
C32	H3200E2020	Screw	1	1	1	1	SM1/8(44)×9
C33	HA100C2020	Screw	1	1	1	1	SM15/64 (28) ×10
C34	H3207E0661	Presser bar guide bracket	1	1	1	1	
C35	H3210E0683	Operation plate	1	1	1	1	
C36	H3210E0682	Knee lifter lever left	1	1			
C37	H3210E0681	Knee lifter rod	1	1	1	1	
C38	H6904D8001	Knee lifter lever left			1	1	
C39	H3200E2060	Presser bar lifting cam	1	1	1	1	
C40	H3208E0672	Presser bar lifter	1	1	1	1	
C41	HA100B2110	Screw	2	2	2	2	SM11/64 (40) ×6.6
C42	H3200E2100	Spring	1	1	1	1	

C.ARM SHAFT MECHANISM

Fig. No.	Part No.	Description	2220	2220/LH	2220-AUT	2220/LH-AUT	Remarks
C43	HA100H2120	Presser spring guide	1	1	1	1	
C44	HA309H0681	Screw	1	1	1	1	SM1/2（28）×49

D. NEEDLE BAR ROCKING MOTION MECHANISM

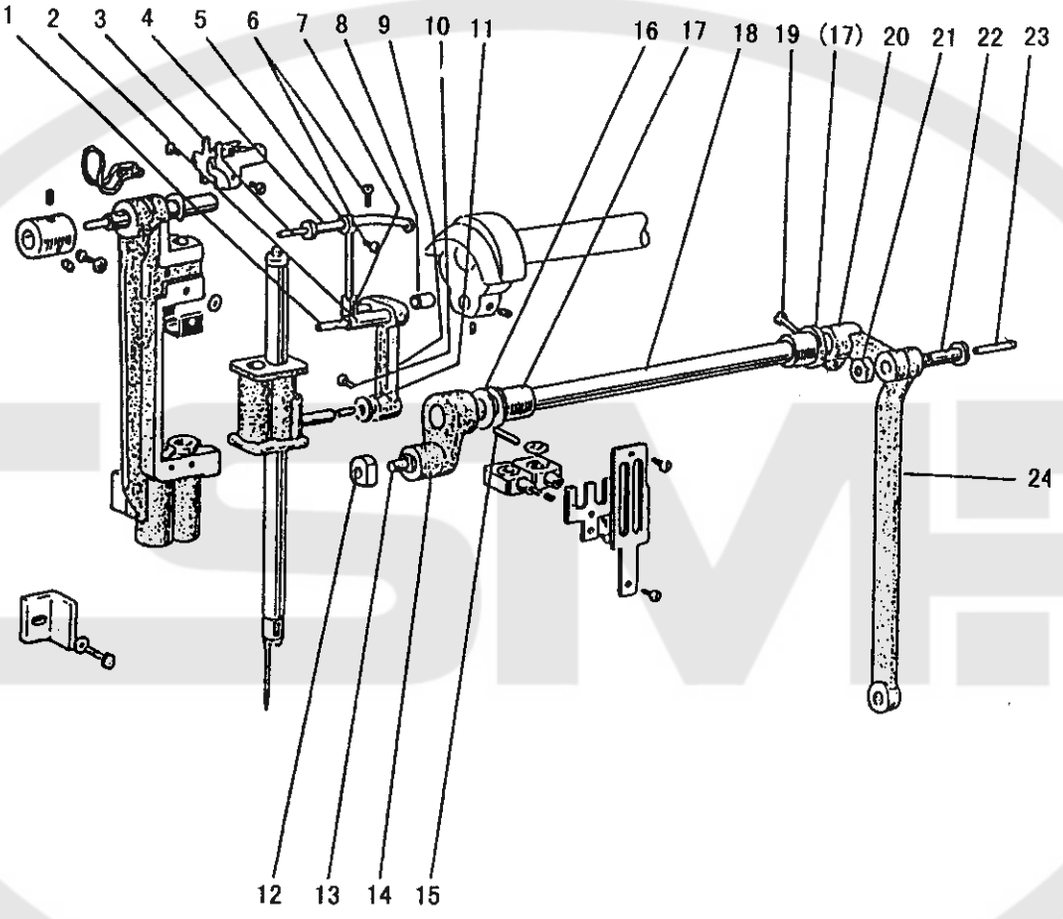

D.NEEDLE BAR ROCKING MOTION MECHANISM

Fig. No.	Part No.	Description	2220	2220/LH	2220-AUT	2220/LH-AUT	Remarks
D01	H2405D0663	Oil wick	1	1	1	1	φ3×80
D02	H2405D0662	Needle bar crank pin	1	1	1	1	
D03	H2405D1122	Oil wick	1	1	1	1	φ2.5×240
D04	H32422C108	Thread take-up guide bracket pin	1	1	1	1	
D05	H34211B205	Thread take-up lever	1		1		
D05	H3504B0651	Thread take-up lever		1		1	
D06	HA110D0672	Screw	3	3	3	3	SM15/64（28）×12
D07	H2405D1112	Thread take-up link	1	1	1	1	
D08	H24211D305	Plug	1	1	1	1	
D09	H3409C0671	Connecting link	1	1	1	1	
D10	HA100H2150	Screw	1	1	1	1	SM9/64(40)×11
D11	H3409C0672	Bushing	1	1	1	1	
D12	H3410C301P	Square block	1	1	1	1	
D13	H3406C0671	Connecting stud	1	1	1	1	
D14	H3406C0672	Needle bar rocking shaft crank	1	1	1	1	
D15	H602040240	Pin	1	1	1	1	GB/T117 4×24
D16	H3400C2050	Washer	1	1	1	1	
D17	H3204B0652	Bushing	2	2	2	2	
D18	H3406C0673	Needle bar rocking shaft	1	1	1	1	
D19	H2012N0652	Screw	1	1	1	1	SM1/4(24)×16
D20	H3407C0661	Connecting crank	1	1	1	1	
D21	H32311D506	Nut	1	1	1	1	SM5/16(24)
D22	H32311D306	Hinged screw	1	1	1	1	SM5/16(24)×26.2
D23	H32311D406	Oil wick	1	1	1	1	
D24	H3407C0662	Rocking shaft connecting rod	1	1	1	1	

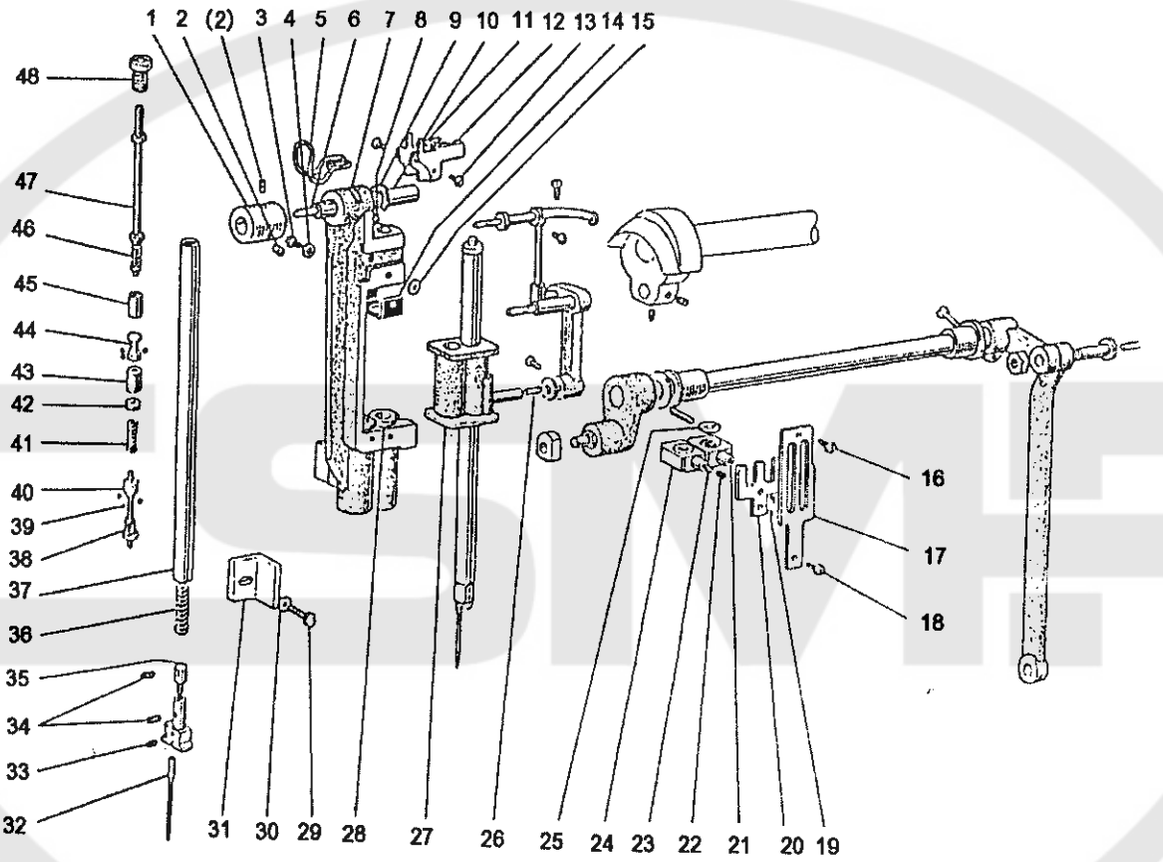
1 2 (2) 3 4 5 6 7 8 9 10 11 12 13 14 15
48
47
46
45
44
43
42
41
40
39
38
37
36
35
34
33
32
31 30 29 28 27 26 25 24 23 22 21 20 19
16
17
18

E.NEEDLE BAR MECHANISM

Fig. No.	Part No.	Description	2220	2220/LH	2220-AUT	2220/LH-AUT	Remarks
E01	H3410C3025	Bushing	1	1	1	1	
E02	HA305E0662	Screw	2	2	2	2	SM15/16(28)×4.5
E03	H32481BC21	Screw	1	1	1	1	SM9/64(40)×6
E04	H3410C301J	Spring	1	1	1	1	
E05	H3410C301O	Oil wick	1	1	1	1	
E06	H3410C3023	Oil wick	1	1	1	1	
E07	H34411C110	Needle bar supporter	1	1	1	1	
E08	H609030220	Pin	1	1	1	1	GB/T879.1 3×22
E09	H007013070	E-type stop ring	1	1	1	1	GB/T896 7
E10	H3410C3022	Needle bar supporter guide pin	1	1	1	1	
E11	H3410C301H	Holder	1	1	1	1	
E12	H3410C301Q	Holder	1	1	1	1	
E13	H3410C301L	Screw	2	2	2	2	SM9/64(40)×4
E14	H3410C301E	Stopper	1	1	1	1	
E15	HA703R0067	Washer	1	1	1	1	
E16	H3410C301K	Screw	1	1	1	1	SM9/64(40)×6.5
E17	H3410C301D	Guide plate	1	1	1	1	
E18	H3215K0693	Screw	1	1	1	1	SM9/64(40)×5
E19	H3410C301C	Screw	1	1	1	1	SM3/32(44)×4.2
E20	H3410C301B	Needle bar supporter	1	1	1	1	
E21	H3410C3015	Needle bar holder (right)	1	1	1	1	
E22	H3410C3019	Set screw	2	2	2	2	SM9/64(40)×3.5
E23	H3410C3018	Needle bar holding stopper	2	2	2	2	
E24	H3410C3017	Needle bar holder (left)	1	1	1	1	
E25	H3410C3016	Spacer	4	4	4	4	
E26	H3204D6513	Felt	1	1	1	1	
E27	H3410C3014	Needle bar holder	1	1	1	1	
E28	H34411C310	Bushing for needle bar supporter	2	2	2	2	
E29	H3400C2020	Bolt	1	1	1	1	SM11/64(40)×12
E30	H3200I2030	Washer	1	1	1	1	
E31	H3400C2010	Needle bar guide	1	1	1	1	
E32	H3204D0658	Needle DP×5#14	2		2		
E32	H3304D0651	Needle DP×5#18		2		2	
E33	H32481B521	Screw	1	1	1	1	SM1/8(44)×3.5
E34	H34412C710	Screw	4	4	4	4	SM1/8(44)×6
E35	H34412C910	Stopper for needle clamp	2	2	2	2	
E36	H34412C410	Spring	2	2	2	2	
E37	H34411C210	Needle bar	2	2	2	2	
E38	H3410C1264	Triangle pin	2	2	2	2	
E39	H3410C3011	Steel ball	12	12	12	12	Sφ2.5
E40	H3410C1263	Stud	2	2	2	2	
E41	H3410C1265	Spring	2	2	2	2	
E42	H3410C1262	Nut	2	2	2	2	SM5/64(64)

E.NEEDLE BAR MECHANISM

Fig. No.	Part No.	Description	2220	2220/LH	2220-AUT	2220/LH-AUT	Remarks
E43	H3410C1261	Nut	2	2	2	2	SM5/64(64)×6
E44	H34412C310	Pin	2	2	2	2	
E45	H34412C210	Sleeve	2	2	2	2	
E46	H34412C110	Spring	2	2	2	2	
E47	H34412C510	Pin	2	2	2	2	
E48	H34412C810	Screw	2	2	2	2	M5.5×5

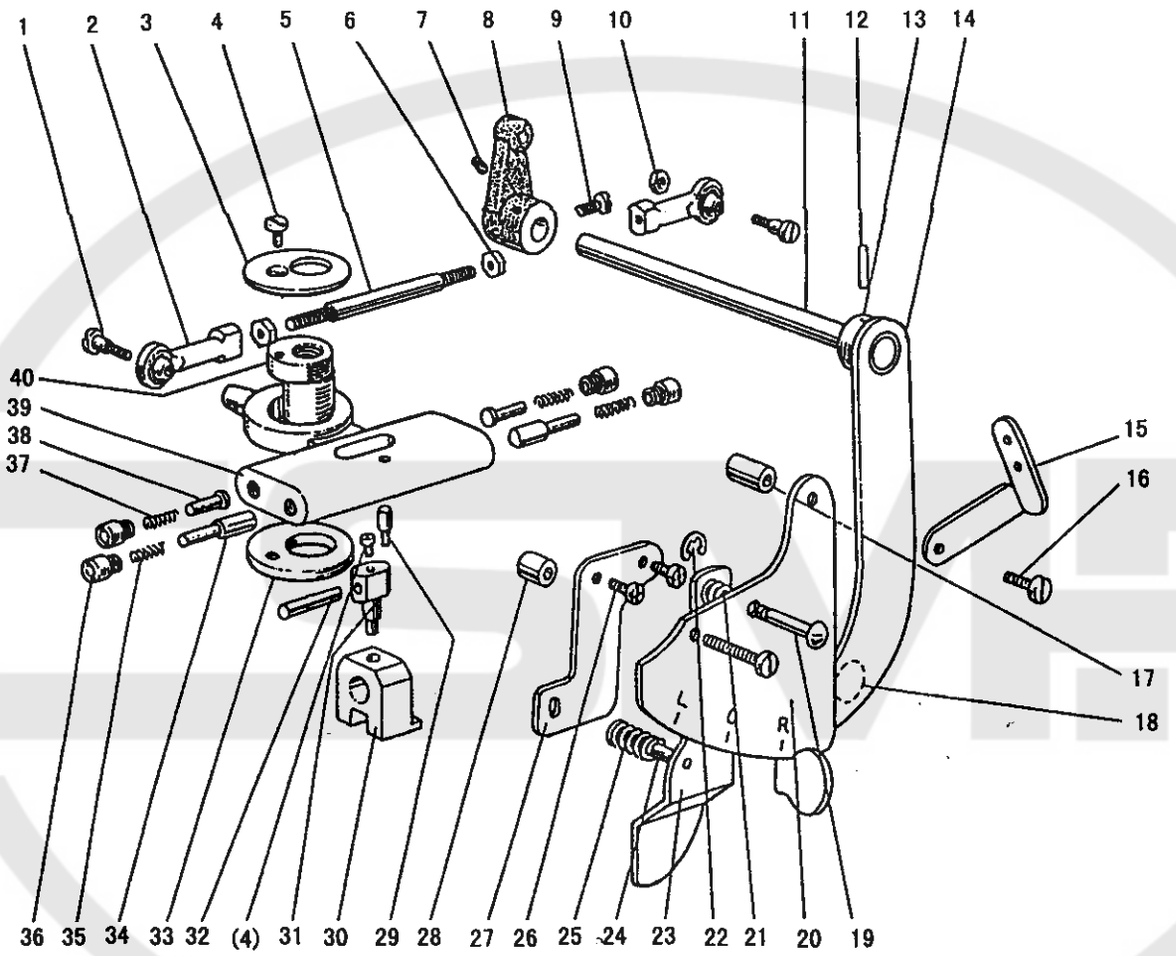
1
2
3
4
5
6
7
8
9
10
11
12
13
14
40
39
38
37
15
16
17
18
36
35
34
33
32
(4)
31
30
29
28
27
26
25
24
23
22
21
20
19

F.NEEDLE BAR CONTROL MECHANISM

Fig. No.	Part No.	Description	2220	2220/LH	2220-AUT	2220/LH-AUT	Remarks
F01	H3400D2030	Screw	2	2	2	2	SM11/64(40)×9.5
F02	H3405D0663	Ball joint	2	2	2	2	JKM5
F03	H3400D2120	Cover	1	1	1	1	
F04	HA7311CC06	Screw	2	2	2	2	SM9/64(40)×6.5
F05	H3405D0661	Connecting rod	1	1	1	1	
F06	H003057050	Nut	2	2	2	2	M5
F07	H3416D0692	Screw	1	1	1	1	SM11/64(40)×6.6
F08	H3416D0691	Arm	1	1	1	1	
F09	HA100B2110	Blot	1	1	1	1	SM15/64(28)×10
F10	H3221B6810	Nut	1	1	1	1	SM11/64(40)
F11	H34321D407	Shaft	1	1	1	1	
F12	H609030180	Spring pin	1	1	1	1	GB/T879.1 3×18
F13	H34321D207	Pinching bushing	1	1	1	1	
F14	H34321D107	Stop motion control lever	1	1	1	1	
F15	H3400L0050	Thread guide	1	1	1	1	
F16	H2004J0067	Screw	2	2	2	2	SM11/64(40)×11.4
F17	H3400D2060	Pipe	1	1	1	1	
F18	H3407D0671	Pin	1	1	1	1	
F19	H3408D0681	Pin	1	1	1	1	
F20	H3408D0686	Lever position plate	1	1	1	1	
F21	H3408D0682	Spring	1	1	1	1	
F22	H007013040	E type stopring	1	1	1	1	GB/T896 4
F23	H3408D0684	Lever	1	1	1	1	
F24	H3408D0685	Pin	1	1	1	1	
F25	H3400D2100	Spring	1	1	1	1	
F26	HA300C2030	Screw	2	2	2	2	SM11/64(40)×8
F27	H3400D2090	Plate	1	1	1	1	
F28	H3400D2080	Pipe	1	1	1	1	
F29	H3400D2110	Screw	1	1	1	1	SM9/64(40)×12.5
F30	H3410C3021	Cam	1	1	1	1	
F31	H3404D0652	Guide pin	1	1	1	1	
F32	H3404D0653	Pin	1	1	1	1	
F33	H3404L0653	Washer	1	1	1	1	
F34	H3404D0655	Pin	2	2	2	2	
F35	H3404D0657	Spring	2	2	2	2	
F36	H3404D0656	Cap screw	4	4	4	4	SM5/16(28)×4
F37	H3404D0658	Spring	2	2	2	2	
F38	H3404D0654	Pin	2	2	2	2	
F39	H3404D0651	Guide	1	1	1	1	
F40	H3404L0652	Bushing	1	1	1	1	

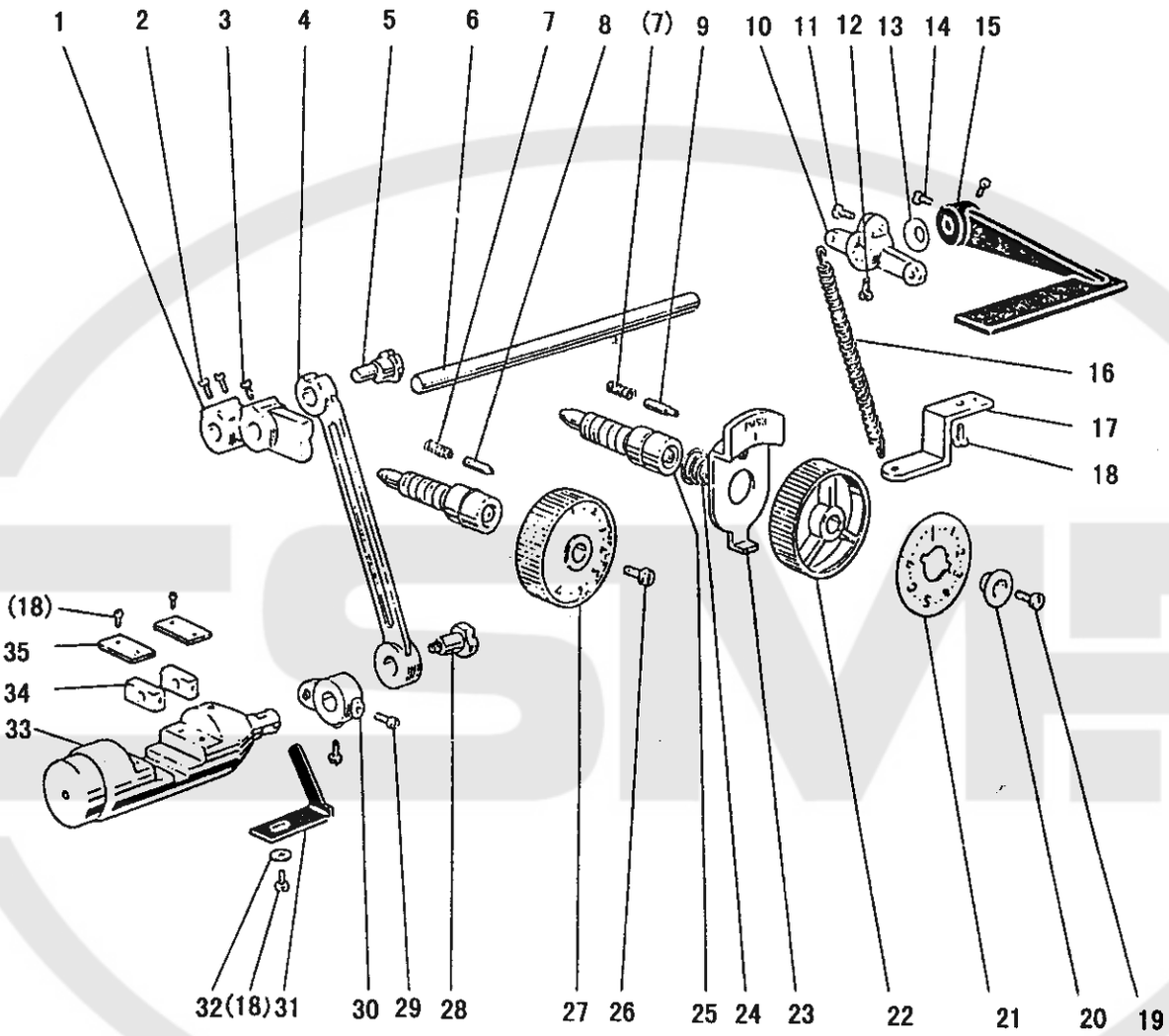
1
2
3
4
5
6
7
8
(7)
9
10
11
12
13
14
15
16
17
18
(18)
35
34
33
32
(18)
31
30
29
28
27
26
25
24
23
22
21
20
19

G.STITCH REGULATOR MECHANISM

Fig. No.	Part No.	Description	2220	2220/LH	2220-AUT	2220/LH-AUT	Remarks
G01	H3204F0651	Feed regulator	1	1	1	1	
G02	HA113F0684	Screw	2	2	2	2	SM15/64（28）×8.5
G03	H3200F2020	Screw	1	1	1	1	SM15/64(28)×12
G04	H3206F0661	Connecting link	1	1	1	1	
G05	H3206F0662	Eccentric shaft	1	1	1	1	
G06	H3200F2060	Reverse stitch shaft	1	1			
G06	H6904F8001	Reverse stitch shaft			1	1	
G07	H3200F2110	Spring	1	1	1	1	
G08	HA100F2080	Pin	1	1			
G09	HA700F2030	Pin			1	1	
G10	H3207F0671	Arm	1	1			
G10	H4905G8001	Arm			1	1	
G11	HA800F2020	Screw	1	1	1	1	SM15/64（28）×16.5
G12	H3207F0672	Screw	1	1	1	1	SM11/64(40)×8.5
G13	HA100F2110	Spring washer	1	1			
G14	HA113F0684	Screw	2	2			SM15/64（28）×8.5
G15	H3216F0071	Reverse sewing lever (complete)	1	1			
G15	H4906G8001	Reverse sewing lever			1	1	
G16	H3207F0673	Spring	1	1	1	1	
G17	H3200F2050	Bracket for spring	1	1			
G18	HA300C2030	Screw	6	6	5	5	SM11/64(40)×8
G19	HA720F0686	Screw			1	1	SM3/16(28)×12
G20	HA720F0685	Bushing			1	1	
G21	H8504H8001	Stitch length indicating plate			1		
G21	H9204F8001	Stitch length indicating plate				1	
G22	HA7421F120	Dial			1	1	
G23	HA720F0683	Stopper pin releasing lever			1	1	
G24	HA720F0687	Coil spring			1	1	
G25	HA109F0671	Screw bar	1	1	1	1	
G26	HA109F0673	Screw	1	1			SM3/6(28)×8
G27	H3213F0702	Dial	1				
G27	H3304F0651	Dial		1			
G28	H3206F0662	Bolt	1	1	1	1	SM1/4(40)×8
G29	H3210F0681	Screw	2	2	2	2	M5×6
G30	H3210F0683	Stitch regulating crank lower	1	1	1	1	
G31	H3200F2080	Holding plate of reverse bar	1	1	1	1	
G32	HA703R0067	Washer	1	1	1	1	
G33	H3212F0692	Reverse bar	1	1	1	1	
G34	H3208G0672	Square block	2	2	2	2	
G35	H3212F0691	Guide plate	2	2	2	2	

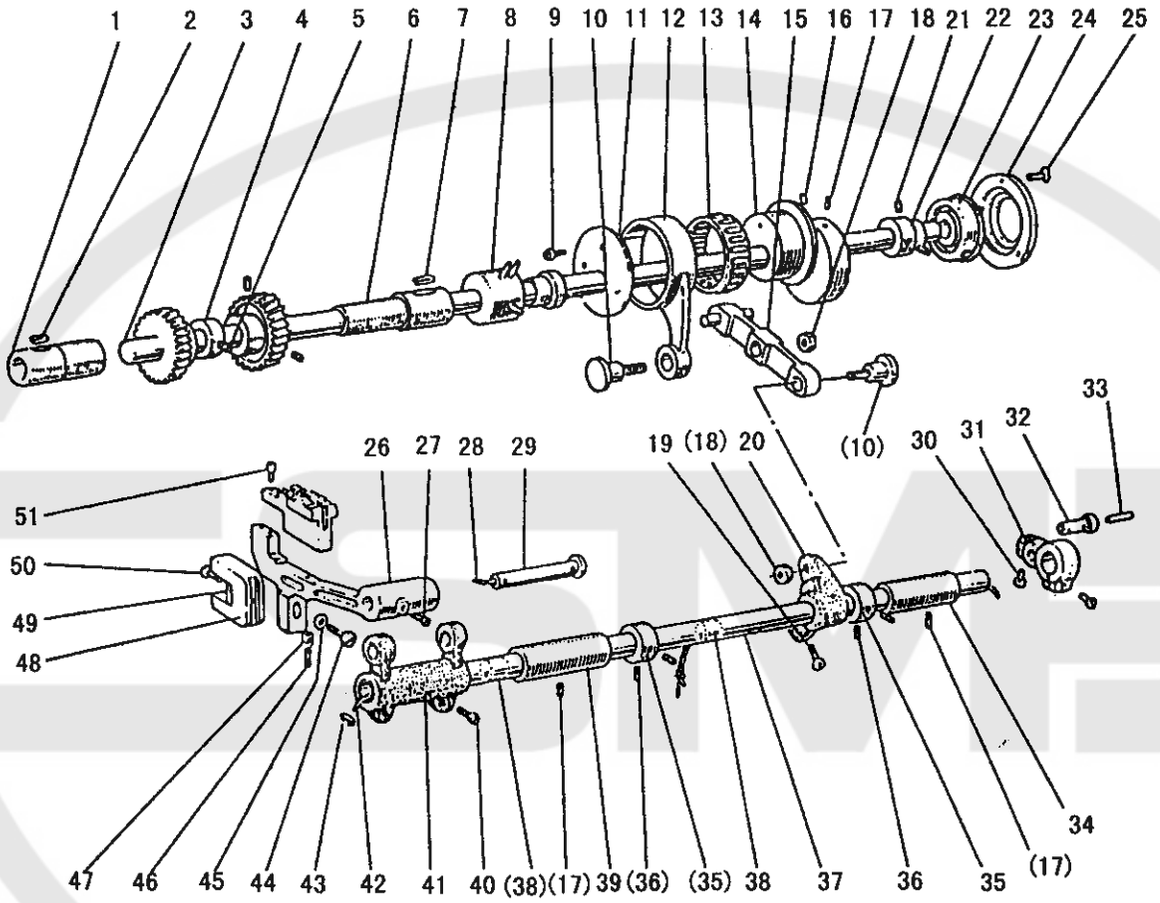
1 2 3 4 5 6 7 8 9 10 11 12 13 14 15 16 17 18 21 22 23 24 25
(10)
33
32
31
30
19 (18) 20
26 27 28 29
51
50
49
48
47 46 45 44 43 42 41 40 (38) (17) 39 (36) (35) 38 37 36 35 (17) 34

H.LOWER SHAFT & FEED ROCK SHAFT MECHANISM

Fig. No.	Part No.	Description	2220	2220/LH	2220-AUT	2220/LH-AUT	Remarks
H01	H32132B104	Lower shaft bushing left	1	1	1	1	
H02	H32132B204	Oil wick	1	1	1	1	
H03	H3200H2010	Lower shaft	1	1	1	1	
H04	H3205H0655	Feed lifting cam	1	1	1	1	
H05	H3205H0654	Screw	1	1	1	1	SM1/4(40)×5
H06	H32143B104	Lower shaft bushing right	1	1	1	1	
H07	H32132B204	Oil wick	1	1	1	1	
H08	H32154B104	Lower shaft bushing middle	1	1	1	1	
H09	HA700F2100	Screw	3	3	3	3	SM11/64(40)×7
H10	H3208G0674	Screw	2	2	2	2	SM1/4(24)×22
H11	H32372G208	Washer	1	1	1	1	
H12	H32372G408	Feed connecting rod	1	1	1	1	
H13	H32372G308	Needle bearing	1	1	1	1	K32×37×13
H14	H32372G108	Lever feed connecting cam	1		1		
H14	H3305G1011	Lever feed connecting cam		1		1	
H15	H32311G108	Link	1	1	1	1	
H16	HA100C2020	Screw	1	1	1	1	SM15/64（28）×10
H17	H2405D0664	Screw	3	3	3	3	SM15/64（28）×14
H18	H3208G0675	Nut	2	2	2	2	SM1/4(24)
H19	H3208G0676	Screw	1	1	1	1	SM15/64(28)×14
H20	H3208G0673	Connecting rod crank	1	1	1	1	
H21	HA105D0662	Screw	2	2	2	2	SM1/4（40）×6
H22	H3208H0662	Bushing	1	1	1	1	
H23	H3208H0661	Ball bearing	1	1	1	1	6004ZZNR/5K
H24	H3200H2060	Bearing holder	1	1	1	1	
H25	HA7311C306	Screw	3	3	3	3	SM9/64（40）×7
H26	H3205G1111	Feed bar	1	1			
H26	H4942H8001	Feed bar			1	1	
H27	HS90131005	Screw	1	1	1	1	M5×5
H28	H3205G0662	Oil wick	1	1	1	1	
H29	H32243G205	Feed bar shaft	1	1	1	1	
H30	H2012N0652	Screw	2	2	2	2	SM1/4（24）×16
H31	H3407C0663	Feed rock shaft crank	1	1	1	1	
H32	H3407C0664	Pin	1	1	1	1	
H33	H24211D405	Oil wick	1	1	1	1	
H34	H3204B0656	Feed rock shaft crank (right)	1	1	1	1	
H35	HA108G0661	Collar	2	2	2	2	
H36	HA105D0662	Screw	4	4	4	4	SM1/4（40）×4
H37	H3204G0651	Feed rock shaft	1	1	1	1	
H38	H3204G0652	Felt	2	2	2	2	
H39	HA100G2120	Feed rock shaft bushing (left)	1	1	1	1	
H40	HA104G0012	Screw	2	2	2	2	SM3/16（28）×12
H41	H3205G1032	Feed rock shaft Crank (left)	1	1			

H.LOWER SHAFT & FEED ROCK SHAFT MECHANISM

Fig. No.	Part No.	Description	2220	2220/LH	2220-AUT	2220/LH-AUT	Remarks
H41	H4905H8001	Feed rock shaft Crank (left)			1	1	
H42	H3205G0662	Oil wick	1	1	1	1	
H43	H3200G2030	Holder	1	1	1	1	
H44	H3200H2040	Bolt	1	1	1	1	SM15/64(28)×18
H45	H005001060	Washer	1	1	1	1	GB/T97.1 6
H46	HS90131951	Screw	1	1	1	1	M3×14
H47	H003056030	Nut	1	1	1	1	M3
H48	H3205H0651	Feed bar connecting fork	1	1	1	1	
H49	H3205H0652	Felt	1	1	1	1	
H50	H3205H0653	Screw	1	1	1	1	SM1/8(44)×4
H51	H32211G205	Bolt	1	1	1	1	SM1/8(40)×7

2220
2220-AUT

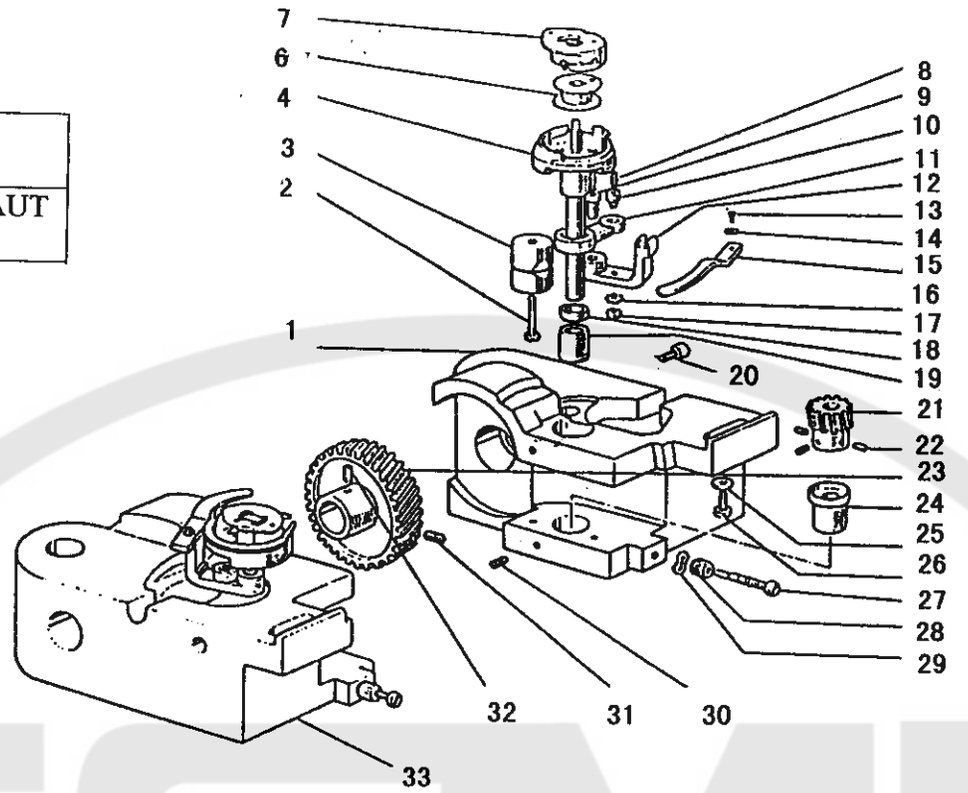

2220/LH
2220/LH-AUT

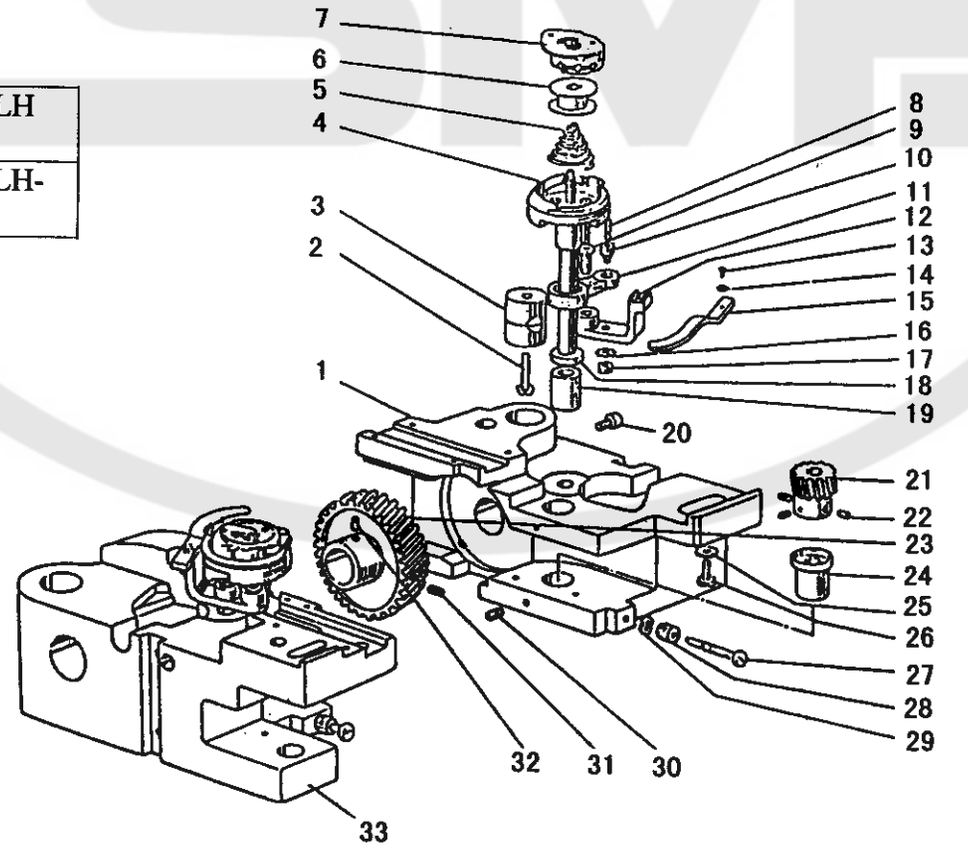

I.HOOK SADDLE MECHANISM

Fig. No.	Part No.	Description	2220	2220/LH	2220-AUT	2220/LH-AUT	Remarks
I01	H3204I0651	Hook saddle (right)	1				
I01	H3304I0651	Hook saddle (right)		1			
I01	H6904H8001	Hook saddle (right)			1		
I01	H4906I8001	Hook saddle (right)				1	
I02	H3207I0661	Screw	2	2	2	2	SM15/64(28)×30
I03	H3207I0066	Bushing	2	2	2	2	
I04	H3405I0652	Hook complete	2				
I04	H3500I2010	Hook complete		2			
I04	H8504I7101	Hook complete			2		HSH-12-15M (3)
I04	H9304J7101	Hook complete				2	HSH-12MC (3)
I05	H6906H8001	Spring			2		
I05	H4922I8001	Spring				2	
I06	H2400I2020	Bobbin	2				
I06	H3306I0067	Bobbin		2			
I06	H8505I8001	Bobbin			2		BO-112 (A) M
I06	H9305J8001	Bobbin				2	BO-112 (A) M
I07	H3406I0671	Bobbin case	2				
I07	H3505I0651	Bobbin case		2			
I07	H8506I8001	Bobbin case			2		CP-12C
I07	H9306J8001	Bobbin case				2	CP-12MC (3)
I08	H3204I0656	Oil wick	2	2	2	2	
I09	H321531504	Bobbin case opener holder pin	2	2	2	2	
I10	H321531204	Screw	2	2	2	2	SM3/16(32)×7.8
I11	H321531304	Link	2		2		
I11	H331311204	Link		2		2	
I12	H321531104	Bobbin case opener holder	2		2		
I12	H331311104	Bobbin case opener holder		2		2	
I13	H2004J0067	Screw	2	2	2	2	SM9/64 (40) ×7
I14	H3200I2030	Washer	2	2	2	2	
I15	H2200I2020	Opener	2		2		
I15	H3305I0066	Opener		2		2	
I16	H005008050	Spring washer	2	2	2	2	GB/T93 5
I17	HA104G0658	Nut	2	2	2	2	SM3/16(32)
I18	H321211304	Spacer	2		2		
I18	H331211204	Spacer		2		2	
I19	H3404I0011	Hook shaft bushing (upper)	2		2		
I19	H331211104	Hook shaft bushing (upper)		2		2	
I20	H3204I0657	Screw	2	2	2	2	SM3/16(28)×14.5
I21	H321421204	Gear (small)	2	2	2	2	
I22	HA105D0662	Screw	6	6	6	6	SM1/4 (40) ×4
I23	H321421104	Gear (large)	2	2	2	2	
I24	H3204I0653	Hook shaft bushing (lower)	2	2	2	2	
I25	H2013J0065	Washer	2	2	2	2	

I.HOOK SADDLE MECHANISM

Fig. No.	Part No.	Description	2220	2220/LH	2220-AUT	2220/LH-AUT	Remarks
I26	H320I2050	Screw	2	2	2	2	SM1/4(24)×23
I27	H320410658	Screw	2	2	2	2	SM3/16(28)×43
I28	H320410659	Nut	2	2	2	2	SM3/16(28)
I29	H005014050	Spring washer	2	2	2	2	GB/T955 5
I30	HA305E0662	Screw	4	4	4	4	SM15/64（28）×4.5
I31	HA307C0662	Screw	2	2	2	2	SM1/4（40）×6
I32	H3204I6510	Screw	2	2	2	2	SM1/4(40)×6.5
I33	H3209I0671	Hook saddle (left)	1				
I33	H3307I0681	Hook saddle (left)		1			
I33	H6905H8001	Hook saddle (left)			1		
I33	H4917I8001	Hook saddle (left)				1	

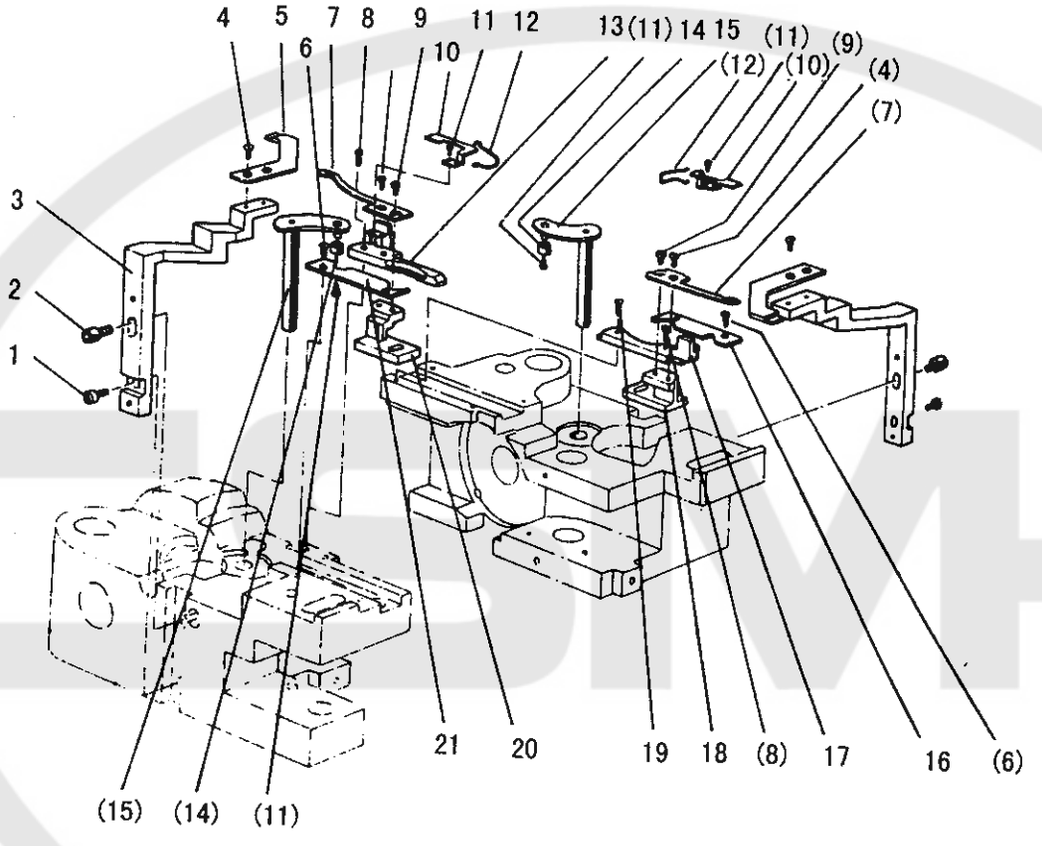
4
5
7
8
9
11
12
13
(11)
14
15
(11)
(9)
6
10
(12)
(10)
(4)
(7)
3
2
1
21
20
19
18
(8)
17
16
(6)
(15)
(14)
(11)

J.UPPER FEED ROCK SHAFT MECHANISM

Fig. No.	Part No.	Description	2220	2220/LH	2220-AUT	2220/LH-AUT	Remarks
J01	H4905J8001	Screw			2	2	SM9/64 (40) ×7
J02	H4906J8001	Bolt			2	2	
J03	H4907J8001	Trimming knife holder			2	2	
J04	H4908J8001	Screw			6	6	SM9/64 (40) ×5
J05	H4909J8001	Fixed blade			2	2	
J06	H4914B8001	Screw			4	4	SM9/64 (40) ×4
J07	H4911J8001	Move knife			2	2	
J08	H4912J8001	Screw			2	2	SM1/8 (40) ×9.2
J09	H4913J8001	Screw			2	2	SM9/64 (40) ×4.5
J10	H4914J8001	Spring plate			2	2	
J11	H4915J8001	Screw			6	6	SM3/32 (56) ×3.8
J12	H4916J8001	Reversing spring			2	2	
J13	H6905I8001	Gulde (left)			1		
J14	H4917J8001	Gulde (left)				1	
J15	H4920J8001	Roller			2	2	
J16	H4921J8001	Lever			2	2	
J17	H4922J8001	Cover (right)			1	1	
J18	H6904I8001	Guide (right)			1		
J19	H4923J8001	Guide (right)				1	
J20	H4924J8001	Knife pad (right)			1	1	
J21	H4925J8001	Screw			1	1	SM9/64 (40) ×9.5
J22	H4926J8001	Knife pad (left)			1	1	
J23	H4927J8001	Cover (left)			1	1	

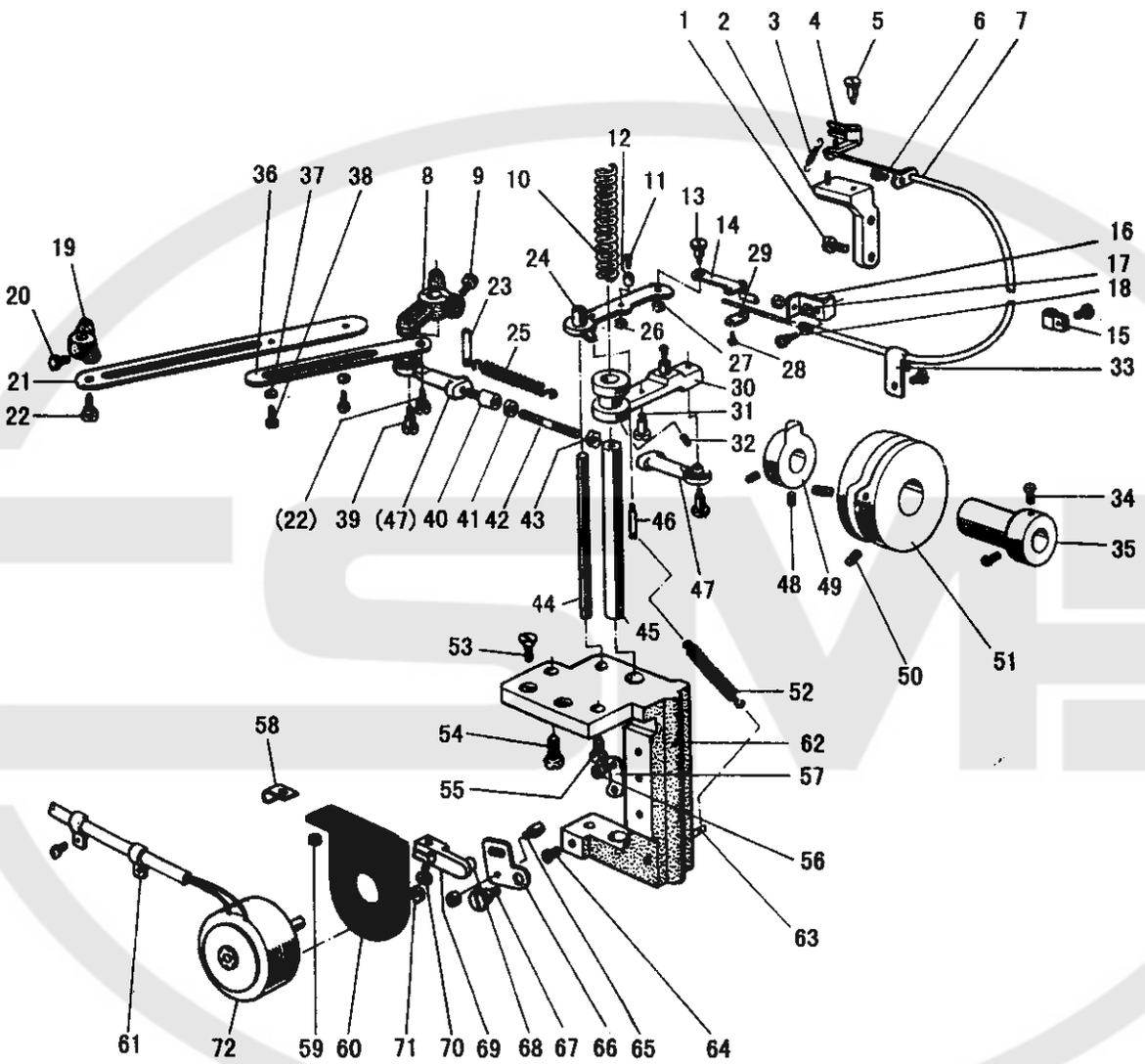
1
2
3
4
5
6
7
8
9
10
11
12
13
14
15
16
17
18
19
20
21
22
23
24
25
26
27
28
29
30
31
32
33
34
35
36
37
38
(22)
39
(47)
40
41
42
43
44
45
46
47
48
49
50
51
52
53
54
55
56
57
58
59
60
61
62
63
64
65
66
67
68
69
70
71
72

K.KNIFE MECHANISM

Fig. No.	Part No.	Description	2220	2220/LH	2220-AUT	2220/LH-AUT	Remarks
K01	HA300C2030	Screw			2	2	SM11/64 (40) ×8
K02	H4915K7101	Thread releading bracket			1	1	
K03	H4918K8001	Spring			1	1	
K04	H4919K7101	Thread releasing			1	1	
K05	H2400I2040	Screw			1	1	SM11/64 (40) ×5
K06	HA300B2170	Screw			4	4	SM11/64 (40) ×8
K07	H4923K7101	Flexible wire complete			1	1	
K08	H6907J8001	Arm			1		
K08	H4912K8001	Arm				1	
K09	H4913K8001	Bolt			1	1	SM15/64 (28) ×12.5
K10	H4945K8001	Spring			1	1	
K11	H4950K8001	Screw			1	1	SM11/64 (40) ×3.6
K12	H4949K8001	Roller			1	1	
K13	H4952K8001	Screw			1	1	SM3/16 (28) ×5
K14	H4953K8001	Mounting plate			1	1	
K15	HA708P0668	Nylon clip			1	1	
K16	H6905J8001	Mounting plate			1	1	
K17	H003002050	Nut			2	2	GB/T6170 M5
K18	H6906J8001	Screw			1	1	SM3/16 (32) ×3.5
K19	H4908K8001	Arm			1	1	
K20	H4907K8001	Bolt			1	1	SM15/64 (28) ×12.5
K21	H4906K8001	Link			1	1	
K22	H4905K8001	Screw			2	2	M5(0.5)×7.5
K23	HA100H2080	Pin type			1	1	
K24	H4946K7101	Thread releasing lever			1	1	
K25	H4943K8001	Spring			1	1	
K26	H4951K8001	Nut			1	1	SM11/64 (40)
K27	H4954K8001	Nut			1	1	SM3/16 (28)
K28	H4956K8001	Screw			2	2	SM1/8 (44) ×7
K29	H4955K8001	Bushing			1	1	
K30	H4957K7101	Vibrating crank			1	1	
K31	H4944K8001	Screw			1	1	SM11/64 (40) ×5.5
K32	H3205G1114	Screw			2	2	M5×5
K33	HA708P0668	Nylon clip			1	1	
K34	HA113F0684	Screw			2	2	SM15/64 (28) ×8.5
K35	H6904J8001	Bushing			1	1	
K36	H4909K8001	Link			1	1	
K37	H005001050	Washer			1	1	GB/T97.1 5
K38	H4911K8001	Bolt			2	2	
K39	H4936K8001	Screw			2	2	M5(0.5)×8.5
K40	H4987K8001	Link screw			1	1	
K41	H4940K8001	Nut (left)			1	1	M5(left)
K42	H4939K8001	Bolt			1	1	

K.KNIFE MECHANISM

Fig. No.	Part No.	Description	2220	2220/LH	2220-AUT	2220/LH-AUT	Remarks
K43	H003002050	Nut (right)			1	1	GB/T6170 M5
K44	H4964K8001	Shaft			1	1	
K45	H4963K8001	Shaft			1	1	
K46	H4985K8001	Screw			1	1	SM11/64 (40) ×4
K47	H3405D0663	Ball joint (right)			1	1	
K48	H3205G1114	Screw			2	2	M4×4
K49	H4934K8001	Cam			1	1	
K50	HA710E0692	Screw			2	2	SM1/4 (40) ×9.5
K51	H4932K8001	Cam			1	1	
K52	H4986K8001	Spring			1	1	
K53	H411050160	Screw			2	2	GB/T819.1 M5×16
K54	H2012N0652	Screw			1	1	SM1/4 (24) ×16
K55	H4983K8001	Screw			1	1	SM1/4 (24) ×13
K56	H4967K8001	Screw			3	3	SM11/64 (40) ×7
K57	H4966K8001	Stopper			1	1	
K58	H4981K8001	Holder			1	1	
K59	H003008050	Nut			2	2	GB/T6172.1 M5
K60	H4977K8001	Mounting plate			1	1	
K61	H4980K8001	Holder			2	2	
K62	H4965K8001	Set plate			1	1	
K63	H3700E2080	Pin type			1	1	
K64	H4969K8001	Screw			1	1	SM11/64 (40) ×8.5
K65	H4970K8001	Screw			1	1	SM11/64 (40) ×6
K66	H4971K8001	Lever			1	1	
K67	H4972K8001	Screw			1	1	SM11/64 (40) ×6.8
K68	H4973K8001	Pin			1	1	
K69	H4974K8001	Arm			1	1	
K70	HA111G0683	Screw			1	1	SM11/64 (40) ×12
K71	HA7111N304	Nut			1	1	SM11/64 (40)
K72	H4979K8004	Solenoid complete			1	1	

L. TOUCH BACK AND DETECTOR MECHANISM

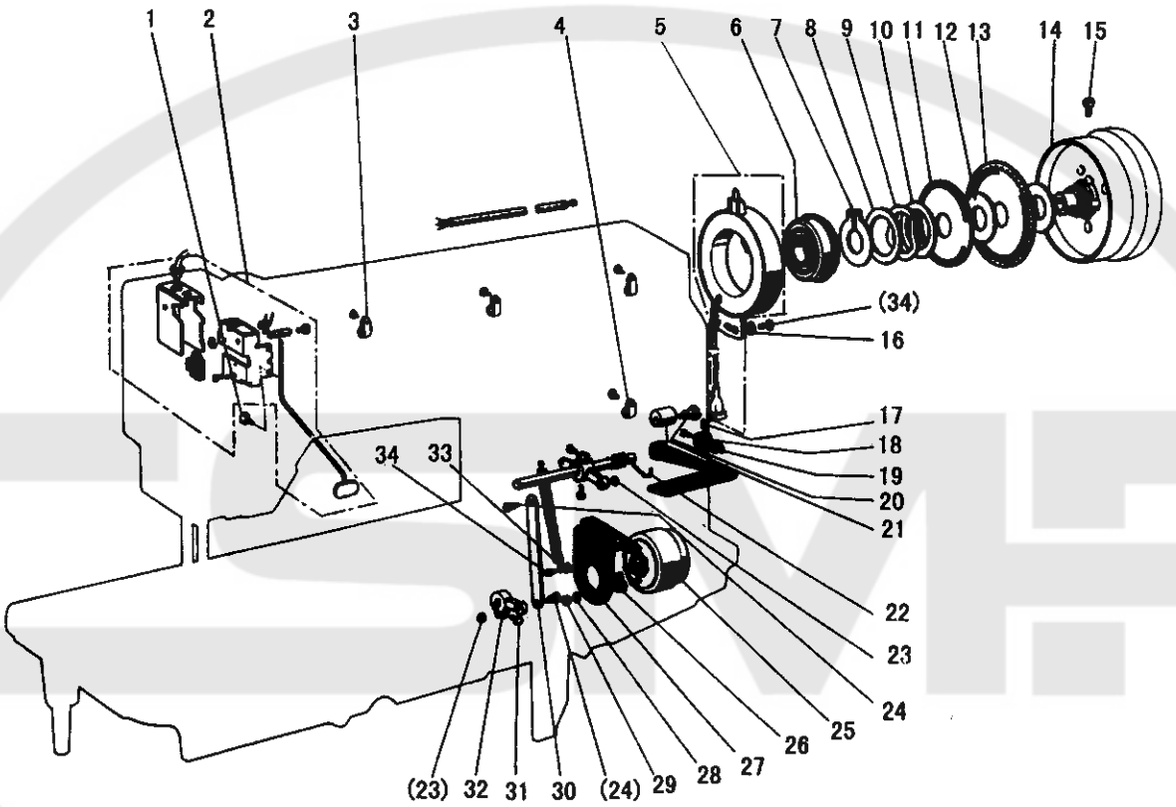

L.TOUCH BACK AND DETECTOR MECHANISM

Fig. No.	Part No.	Description	2220	2220/LH	2220-AUT	2220/LH-AUT	Remarks
L01	H4918L8001	Screw			2	2	M5
L02	H4905L7101	Touch switch (complete)			1	1	
L03	HA700Q0030	Cord holder			3	3	
L04	H4922L8001	Cord holder			1	1	
L05	HA703R0065	Detector bracket (complete)			1	1	
L06	H3205J0662	Ball bearing			1	1	NTN 6204Z
L07	H007009300	Retaining ring C-type			1	1	GB/T894.1 30
L08	HA700R0060	Washer			1	1	
L09	HA700R0050	Support spring			1	1	
L10	HA700R0040	Spacer B			1	1	
L11	H4928L8001	Speed command disk F20 (up)			1	1	
L12	HA700R0030	Spacer A			2	2	
L13	H4930L8001	Speed command disk F11 (down)			1	1	
L14	H4931L8001	Pulley (complete)			1	1	
L15	HA110D0672	Screw			1	1	SM15/64 (28) ×12
L16	HA703R0067	Washer			1	1	
L17	HA3411D308	Screw			1	1	SM15/64 (28) ×7
L18	H4936L8001	Lever (complete)			1	1	
L19	HA113F0684	Screw			1	1	SM15/64 (28) ×7.5
L20	H4937L8001	Screw			1	1	SM15/64 (28) ×6
L21	H4938L8001	Rubber ring			1	1	
L22	H4939L8001	Spring			1	1	
L23	H4940L8001	Nut			2	2	SM15/64 (28)
L24	H4941L8001	Screw			2	2	SM15/64 (28) ×14
L25	H4943L8001	Solenoid (complete)			1	1	
L26	H102080120	Blot			2	2	GB/T5781 M8×12
L27	H6904K8001	Set plate			1	1	
L28	H005008060	Spring washer			2	2	GB/T93 6
L29	H003002060	Nut			2	2	GB/T6170 M6
L30	H4948L8001	Link			1	1	
L31	H4949L8001	Blot			1	1	SM15/64 (28) ×13
L32	H4950L8001	Arm			1	1	
L33	H4942L8001	Nut			1	1	SM11/64 (40)
L34	HA300C2030	Screw			2	2	SM11/64 (40) ×8

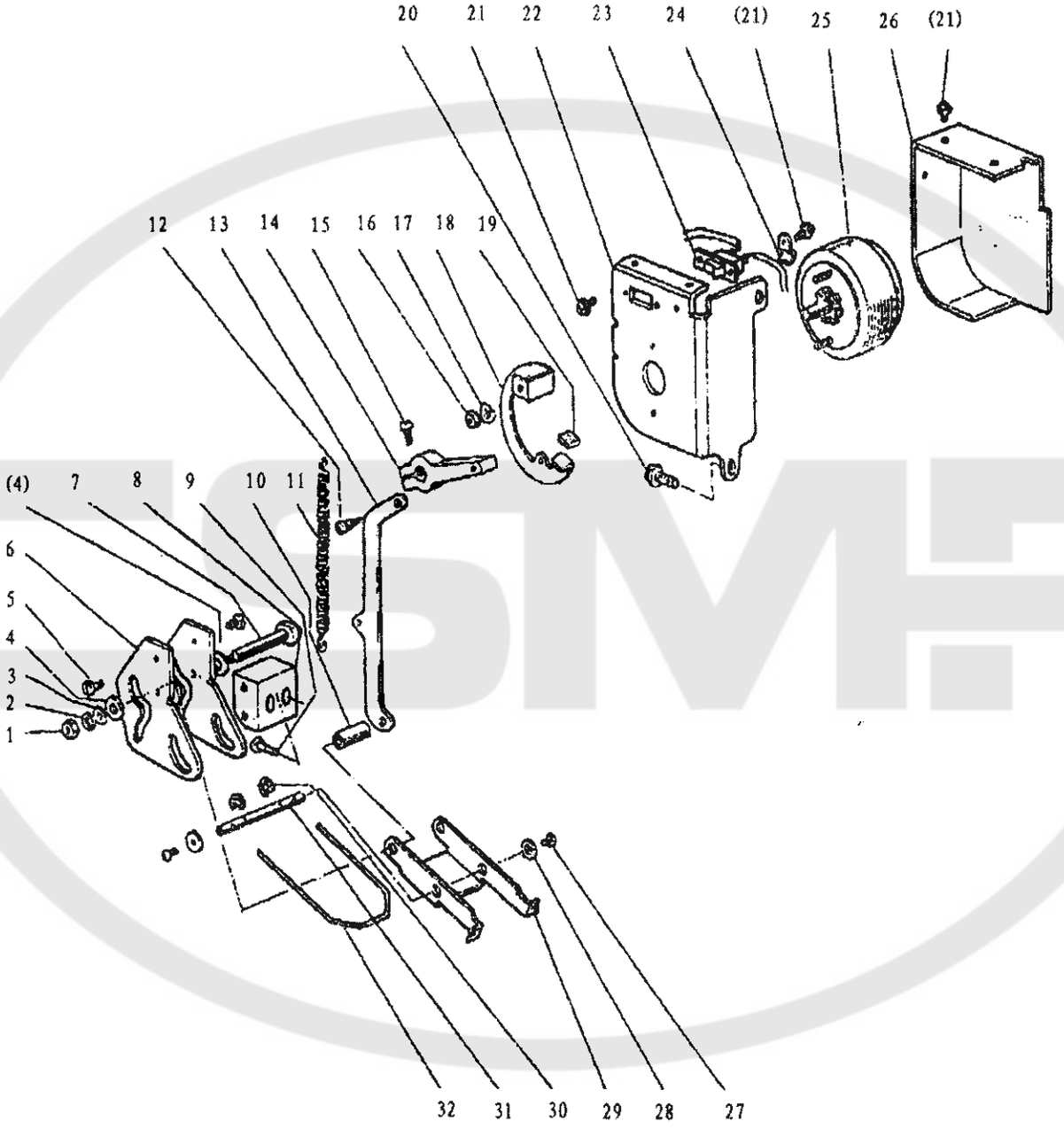
20
21
22
23
24
(21)
25
26
(21)
12
13
14
15
16
17
18
19
(4)
7
8
9
10
11
6
5
4
3
2
1
32
31
30
29
28
27

M.WIPER MECHANISM

Fig. No.	Part No.	Description	2220	2220/LH	2220-AUT	2220/LH-AUT	Remarks
M01	H003002030	Nut			1		GB/T6170 M3
M02	H005009030	Spring washer			1		GB/T859 3
M03	H005006030	Washer			1		GB/T96 3
M04	H005004040	Washer			2		GB/T848 4
M05	HA300C2030	Screw			4		SM11/64(40)×7
M06	H6909L8001	Cam plate (complete)			2		
M07	H6910L8001	Shaft			1		
M08	H6911L8001	Wiper stand			1		
M09	H6912L8001	Screw			2		SM11/64(40)×20
M10	H6913L8001	Collar			1		
M11	H6914L8001	Spring			1		
M12	H6915L8001	Screw			1		SM9/64(40)×7.4
M13	H6916L8001	Link			1		
M14	H6917L8001	Wiper crank			1		
M15	HA111G0683	Screw			1		SM11/64(40)×11.4
M16	H003002040	Nut			2		GB/T6170 M4
M17	H005009040	Spring washer			2		GB/T859 4
M18	H6921L8001	Stopper plate			1		
M19	H6922L8001	Cushion			1		
M20	HA100E2150	Screw			2		SM11/64(40)×8.2
M21	H409030060	Screw			6		GB/T818 M3×6
M22	H6924L8001	Solenold plate			1		
M23	HA708P0665	Switch			1		
M24	HA700P0060	Cord holder			1		
M25	H6928L8001	Rotary solenold			1		
M26	H6929L8001	Cover			1		
M27	HA104G0654	Screw			2		SM1/8(44)×6
M28	H6932L8001	Washer			2		
M29	H6930L8001	Wiper silde plate			1		
M30	H007013040	E-type stop ring			2		
M31	H6927L8001	Wiper shaft			1		
M32	H6931L8001	Wiper			1		

N. OIL LUBRICATION MECHANISM

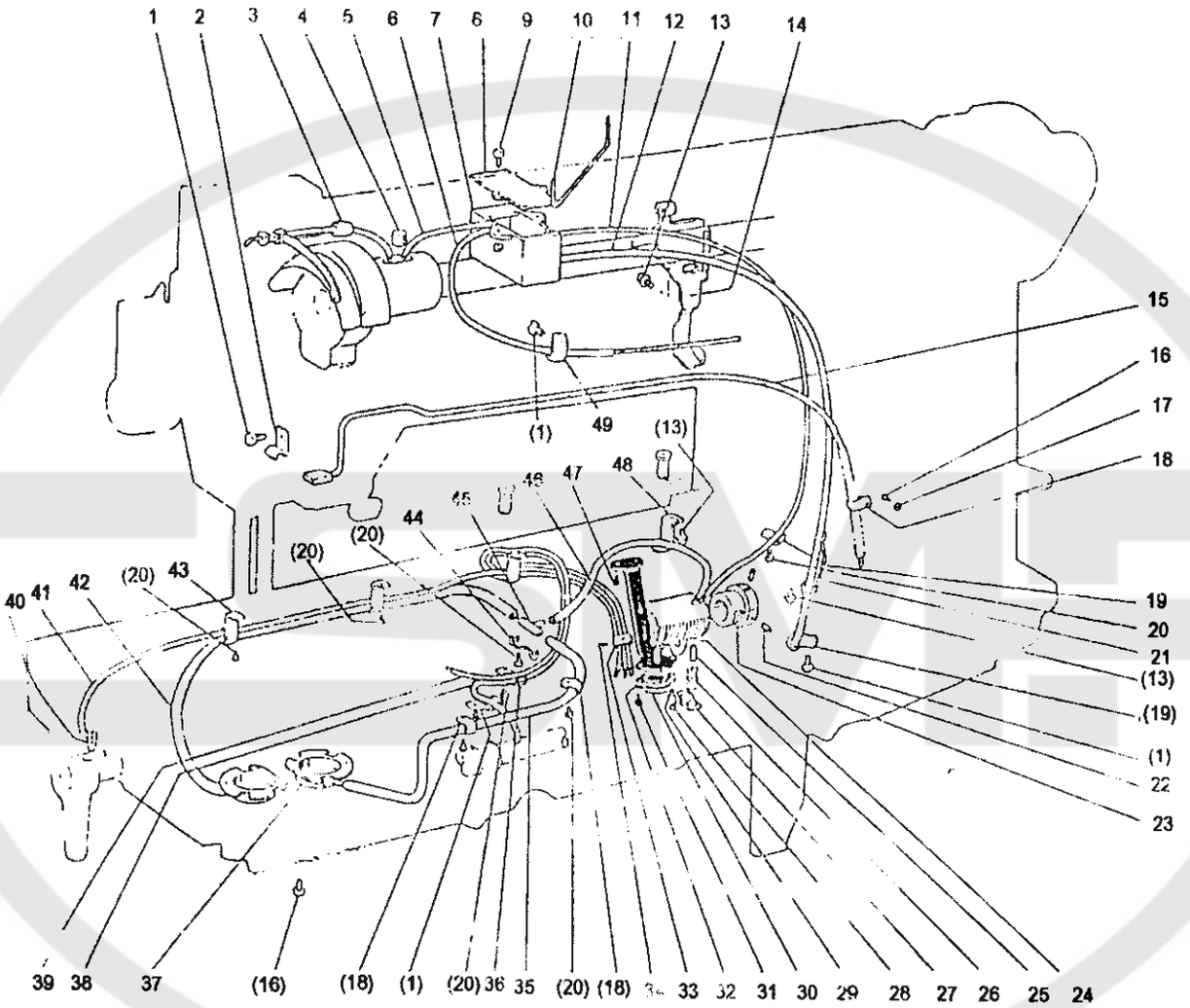

N.OIL LUBRICATION MECHANISM

Fig. No.	Part No.	Description	2220	2220/LH	2220-AUT	2220/LH-AUT	Remarks
N01	HA300C2030	Screw	3	3	3	3	SM11/64(40)×8
N02	H3200K0050	Holder	1	1	1	1	
N03	H3210K0672	Pipe	1	1	1	1	
N04	H32175B304	Felt	1	1	1	1	
N05	H3204K0032	Oil pipe & wick complete	1	1	1	1	
N06	H3204K0043	Oil pipe & wick complete	1	1	1	1	
N07	H3204K0011	Oil tank complete	1	1	1	1	
N08	H3204K0659	Gasket	1	1	1	1	
N09	H411040160	Screw	2	2	2	2	GB/T819.1 M4×16
N10	H4707J8001	Holder	1	1	1	1	
N11	H3204K0655	Pipe	1	1	1	1	
N12	H3204K0656	Pipe	1	1	1	1	
N13	HA300B2170	Screw	1	1	1	1	SM11/64(40)×9
N14	H3200K0040	Holder	1	1	1	1	
N15	H3209K0066	Pipe & felt complete	1	1	1	1	
N16	HA7311CC06	Screw	7	7	7	7	SM9/64(40)×6.5
N17	H005008030	Spring washer	1	1	1	1	GB/T93 3
N18	H32311D606	Holder	4	4	4	4	
N19	H3200K0190	Holder	2	2	2	2	
N20	HA300B2130	Screw	7	7	6	6	SM11/64(40)×5.5
N21	H3200K0200	Holder	1	1	1	1	
N22	H3230K0751	Screw	2	2	2	2	SM11/64(40)×10
N23	H3230K0752	Bushing	1	1	1	1	
N24	H3215K0696	Pipe	1	1	1	1	
N25	H110012070	Pin	1	1	1	1	
N26	H110012090	Spring	1	1	1	1	
N27	H110012110	Spring holder	1	1	1	1	
N28	H3204D6510	Screw	1	1	1	1	SM1/8(44)×4.8
N29	H3215K0693	Screw	1	1	1	1	SM9/64（40）×5
N30	H3215K0692	Filter	1	1	1	1	
N31	H3215K0694	Screw	1	1	1	1	SM9/64(40)×7
N32	H3215K4011	Base plate complete	1	1	1	1	
N33	H3215K0695	Holder	1	1	1	1	
N34	H3215K0693	Screw	1	1	1	1	SM9/64(40)×4.5
N35	H3210K0672	Pipe	1	1	1	1	
N36	H3200K0170	Holder	1	1	1	1	
N37	H3211K0068	Cover complete	2	2	2	2	
N38	H3218K0072	Oil pipe & wick complete	1	1	1	1	
N39	H3219K0072	Oil pipe & wick complete	1	1	1	1	
N40	H3200K0180	Oil wick	3	3	3	3	
N41	H3216K0070	Oil pipe & wick complete	1	1	1	1	
N42	H3204K0655	Pipe	1	1	1	1	
N43	H3200K0160	Holder	2	2	2	2	

N.OIL LUBRICATION MECHANISM

Fig. No.	Part No.	Description	2220	2220/LH	2220-AUT	2220/LH-AUT	Remarks
N44	H3210K0675	Holder	1	1	1	1	
N45	H3210K0671	Oil pipe connector	1	1	1	1	
N46	HW48887-18	Pipe	1	1	1	1	
N47	HA100E2150	Screw	2	2	2	2	SM9/64(40)×10
N48	H3200K0250	Holding plate	1	1	1	1	
N49	H3200K0030	Holder	1	1	1	1	

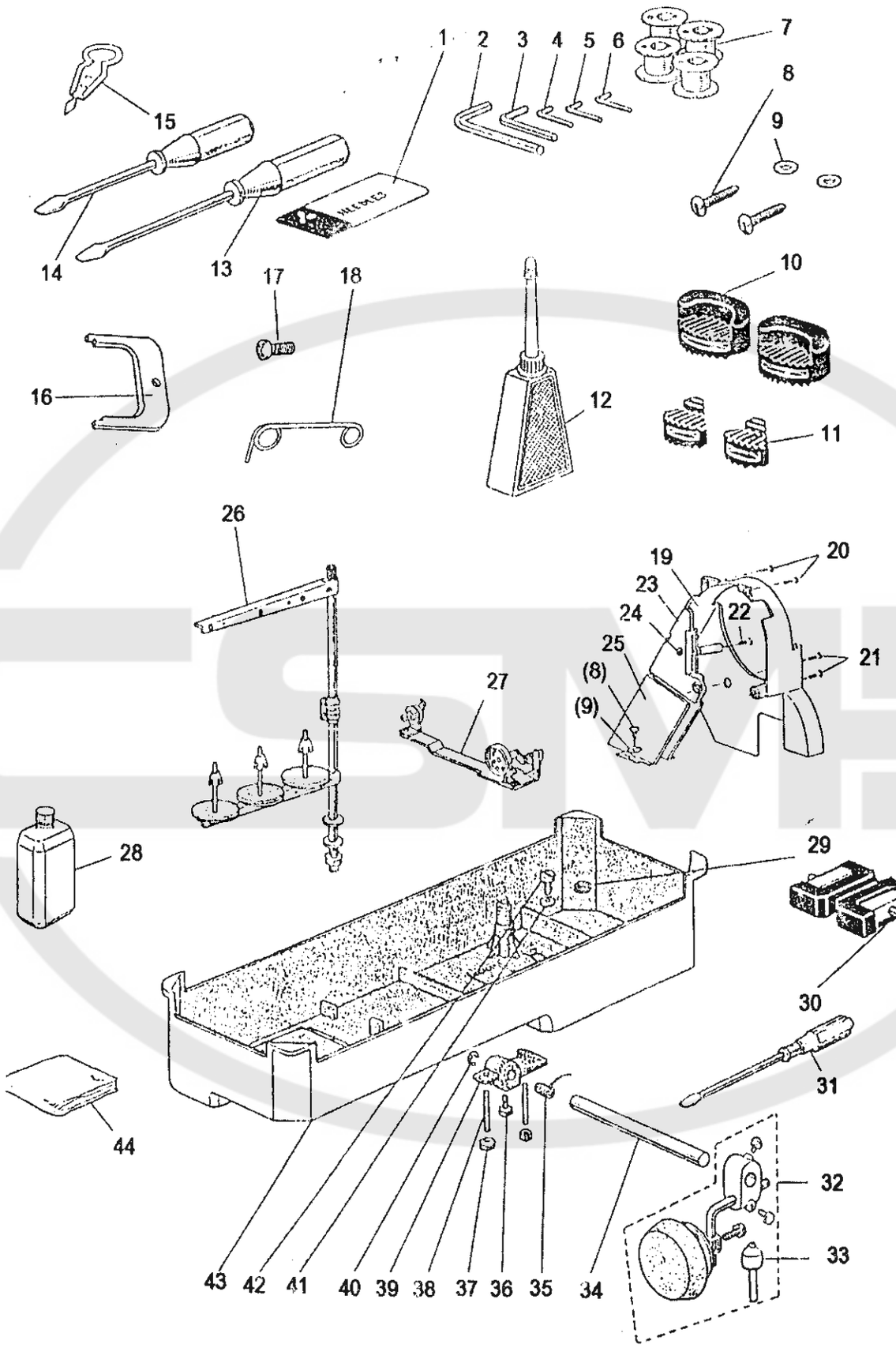
1
2
3
4
5
6
7
8
9
10
11
12
13
14
15
16
17
18
19
20
21
22
23
24
25
(8)
(9)
26
27
28
29
30
31
32
33
34
35
36
37
38
39
40
41
42
43
44

O.ACCESSORIES

Fig. No.	Part No.	Description	2220	2220/LH	2220-AUT	2220/LH-AUT	Remarks
O01	H3204D0658	Needle DP×5#14	6		6		DP×5 #14
O01	H3300L0020	Needle DP×5#14		6		6	DP×5-#21
O02	H3200L0050	Socket wrench 2.5	1	1	1	1	
O03	H3200L0060	Socket wrench 3			1	1	
O04	H4905N8001	Socket wrench 2			1	1	
O05	H3404M0651	Socket wrench 1/16	1	1	1	1	
O06	H8504M8001	Socket wrench 1.5			1	1	
O07	H2400I2020	Bobbin	4				
O07	H3306I0067	Bobbin		4			
O07	H8505I8001	Bobbin			4		
O07	H9305J8001	Bobbin				4	
O08	H801045200	Screw	4	4	4	4	GB/T99 4.5×20
O09	HA300J2230	Washer	4	4	4	4	
O10	H3200L0020	Vibration preventing rubber	2	2	2	2	
O11	H3200L0030	Vibration preventing rubber	2	2	2	2	
O12	HA100J2110	Oiler	1	1	1	1	
O13	HA300J2200	Screw driver (middle)	1	1	1	1	
O14	HA300J2210	Screw driver (small)	1	1	1	1	
O15	H3207L0651	Thread a needle kit	1	1	1	1	
O16	HA704S0654	Adjusting plate for speed command disc			1	1	
O17	H409030060	Screw			1	1	GB/T818 M3×6
O18	H4907N8001	Thread guide			1	1	
O19	H2008O0068	Belt cover 1	1	1	1	1	
O20	HA300B2170	Screw	2	2	2	2	SM11/64(40)×8
O21	HA300J2280	Screw	2	2	2	2	SM11/64(28)×8
O22	HA300J2250	Screw	1	1	1	1	M4×8
O23	H2008O0070	Belt cover 2	1	1	1	1	
O24	H003008040	Nut	1	1	1	1	GB/T6172.1 M4
O25	HA305J0665	Belt cover 3	1	1	1	1	
O26	H3200L0120	Cotton Stand	1	1	1	1	
O27	H3200L0190	Bobbin winder	1				black
O27	H3300L0040	Bobbin winder		1			black
O27	HA706S0067	Bobbin winder			1	1	gray
O28	H3200L0130	Oil can	1	1	1	1	
O29	HA100J2120	Magnet block for reservoir	1	1	1	1	
O30	HA307J0067	Hinge complete	1	1	1	1	
O31	HA300J2070	Screw driver (large)	1	1	1	1	
O32	H3214L0067	Small parts	1	1	1	1	
O33	H3214L2011	Knee lifter pin	2	2	2	2	
O34	H3213L0662	Knee lifter shaft	1	1	1	1	
O35	HA104J0657	Spring	1	1	1	1	
O36	HA106J0664	Bolt	1	1	1	1	
O37	HA104J6510	Nut	1	1	1	1	SM15/64 (28)

O.ACCESSORIES

Fig. No.	Part No.	Description	2220	2220/LH	2220-AUT	2220/LH-AUT	Remarks
O38	HA104J0659	Screw	1	1	1	1	SM15/64（28）×27
O39	H3213L0664	Knee lifter crank	1	1	1	1	
O40	H007013090	E-type stop ring	2	2	2	2	GB/T896 9
O41	HA104J0653	Washer	2	2	2	2	
O42	HA104J0652	Screw	1	1	1	1	SM5/64（28）×8.2
O43	H3213L0661	Oil reservoir	1	1	1	1	
O44	HA100J2180	Vinyl cover	1	1	1	1	
O45	H3218L0681	Felt	1	1	1	1	

Gauge Parts List

	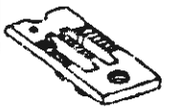	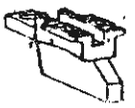		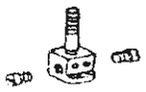		
Gauge Size	Needle Plate	Feed Dog	Presser Foot	Needle Clamp	Slide Plate (L)	Slide Plate (R)
DN-2220						
1/8(3.2mm)	H3200B2220	H3200G2100	H3215E0066	H34C0C2080	H3200B2140	H3200B2150
3/16(4.9mm)	H3200B2240	H3200G2120	H3217E0068	H3400C2090	H3200B2140	H3200B2150
1/4(6.4mm)	H3200B2110	H3221G305	H3206E0065	H3410C3013	H3200B2140	H3200B2150
5/16(8mm)	H3200B2260	H3200G2140	H3219E0070	H3400C2100	H3200B2350	H3200B2150
3/8(9.5mm)	H3200B2270	H3200G2150	H3220E0071	H3400C2110	H3200B2350	H3200B2150
1/2(12.7mm)	H3200B2280	H3200G2030	H3221E0072	H3400C2120	H3200B2360	H3200B2150
DN-2220/LH						
1/8(3.2mm)	H3300B2140	H3300G2100	H3307E0068	H3400C2080	H3200B2140	H3200B2150
3/16(4.9mm)	H3300B2160	H3300G2120	H3305E0066	H3400C2090	H3200B2140	H3200B2150
1/4(6.4mm)	H3300B2020	H3304G0011	H3304E0065	H3410C3013	H3200B2140	H3200B2150
5/16(8mm)	H3300B2180	H3300G2140	H3306E0067	H3400C2100	H3200B2350	H3200B2150
3/8(9.5mm)	H3300B2190	H3300G2150	H3308E0069	H3400C2110	H3200B2350	H3200B2150
1/2(12.7mm)	H3300B2060	H3300G2030	H3309E0070	H3400C2120	H3200B2360	H3200B2150
DN-2220-AUT						
1/8(3.2mm)	H6910B8001	H6910G8001	H3215E0066	H3400C2080	H4732B8001	H4733B8001
3/16(4.9mm)	H6906B8001	H6912G8001	H3217E0068	H3400C2090	H4732B8001	H4733B8001
1/4(6.4mm)	H6908B8001	H6904G8001	H3204E0065	H3410C3013	H4732B8001	H4733B8001
5/16(8mm)	H6914B8001	H6914G8001	H3219E0070	H3400C2100	H4746B8001	H4733B8001
3/8(9.5mm)	H6915B8001	H6915G8001	H3220E0071	H3400C2110	H4746B8001	H4733B8001
1/2(12.7mm)	H6916B8001	H6916G8001	H3221E0072	H3400C2120	H4747B8001	H4733B8001
DN-2220/LH-AUT						
1/8(3.2mm)	H9208B8001	H9206G8001	H3307E0068	H3400C2080	H4732B8001	H4733B8001
3/16(4.9mm)	H9210B8001	H9208G8001	H3305E0066	H3400C2090	H4732B8001	H4733B8001
1/4(6.4mm)	H9204B8001	H9204G8001	H3304E0065	H3410C3013	H4732B8001	H4733B8001
5/16(8mm)	H9212B8001	H9210G8001	H3306E0067	H3400C2100	H4746B8001	H4733B8001
3/8(9.5mm)	H9213B8001	H9211G8001	H3308E0069	H3400C2110	H4746B8001	H4733B8001
1/2(12.7mm)	H9214B8001	H9212G8001	H3309E0070	H3400C2120	H4747B8001	H4733B8001

CSMP

IMCA bv - Holland
Hendrik Figeeweg 4
2031 BJ Haarlem
Phone: (31) 23 531 95 84
Fax: (31) 23 531 10 22
e-mail :info@imca.net

IMCA USA - Georgia
3249 Cleveland highway
Gainesville GA 30506
Phone: (1) 770 535 7538
Fax: (1) 770 532 3896
e-mail: imca4@bellsouth.net

IMCA France
3 Square des Bouleaux
49300 Cholet
France
Phone (33) 2 4158 8148
Fax (33) 2 4171 9822
e-mail: bernard.cleon@free.fr

Global International BV
H. Figeeweg 4
2031 BJ Haarlem
tel: (31) 23-5319584
fax: (31) 23-5311022
e-mail: global@imca.net

Global Parts bv
H. Figeeweg 4B
2031 BJ Haarlem
tel: (31) 23-5425312
fax: (31) 23-5423422
e-mail: globalparts@planet.nl