brother

D.C. MOTOR
MOTOR D.C.
LE MOTEUR D.C.
EL MOTOR D.C.

MD-802
MD-812

PARTS BOOK
TEILEKATALOG
LIVRE DES PIECES
LIBRO DE REFERENCIA DE PIEZAS

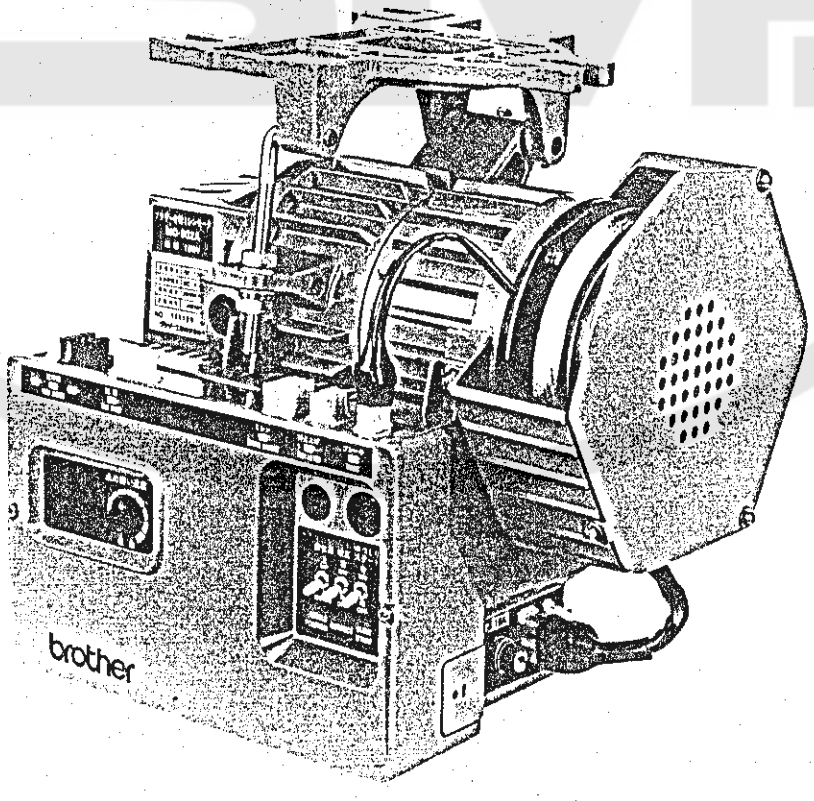

Notes for using this parts book

1. If the symbol [ ] is found in the "Parts No." column or the "Assembly No." column, refer to the different parts list on page 6, 7.
2. The symbol [ ] in the "Parts No." column indicates that the parts is not available for supply. If, however, there is a number in the "Assembly No." column, the parts can be ordered as an assembly. Please, therefore, order by using the assembly number.
3. This book was prepared based on information available in November, 1986.
4. Parts are subject to changes in design without prior notice.

Anmerkungen zum Gebrauch dieses Stücklistebuches

1. Dieses Zeichen [ ] in der Spalte "Parts No. (Teilnummer)" oder "Assembly No. (Gerätesatznummer)" verweist auf die Gesonderte Stückliste auf Seite 6, 7.
2. Dieses Zeichen [ ] in der Spalte "Teilnummer" bedeutet, daß dieser Teil nicht lieferbar ist. Wenn jedoch in der Spalte "Gerätesatznummer" eine Nummer steht, kann dieser Teil als ein Geräteteilsatz bestellt werden. Bestellen Sie daher bitte mit dieser Gerätesatznummer.
3. Dieses Buch basiert auf den Informationen vom November, 1986.
4. Modelländerungen sind vorbehalten.

CONTENTS

A. Motor Mechanism (1) 1
A. Motor Mechanism (2) 2
B. Control Box (B737) 3
C. Control Box (B738) 4
D. Switch Box 5
DIFFERENT PARTS LIST 6, 7
INDEX 8

INHALTSVERZEICHNIS

A. Motors (1) 1
A. Motors (2) 2
B. Schaltkasten (B737) 3
C. Schaltkasten (B738) 4
D. Schaltkasten 5
ZUBEHÖRLISTE 6, 7
VERZEICHNIS 8

Notes sur l'utilisation de ce manuel de pièces détachées

1. Si le symbole [ ] se trouve dans la colonne "Parts No. (N° de pièce)" ou dans la colonne "Assembly No. (N° jeu de pces)", veuillez vous référer à la liste de pièces annexe page 6, 7.
2. Le symbole [ ] dans la colonne "N° de pièce" signifie que la pièce ne peut être fournie. Si, dans la colonne "N° jeu de pces", il y a un numéro de nomenclature, la pièce peut être commandée comme faisant partie d'un jeu de pièces. Donc, pour toute commande, veuillez spécifier le n° du jeu de pièces.
3. Ce manuel a été fait d'après les renseignements valables au mois de Novembre 1986.
4. Les pièces peuvent être sujettes à des modifications sans préavis.

Notas para usar este Libro de Piezas

1. De haber un símbolo [ ] junto al "Parts No. (Número de Pieza)" o en la columna del "Assembly No. (Número de Juego)", habrá que mirar la lista de piezas separada de la página 6, 7.
2. El símbolo [ ], que se encuentra en la columna del "Número de Pieza", quiere decir que no se dispone de dicha pieza sola. Cuando, empero, hay un número en la columna del "Número de Juego", se podrá ordenar la pieza con todo el juego. Por lo tanto, será mejor hacer el pedido recurriendo al número del juego respectivo.
3. Este libro ha sido compilado basándose en los datos de que se disponía en noviembre de 1986.
4. Las piezas quedan sujetas a cambios de diseño sin aviso previo.

TABLE DES MATIERES

A. Mécanisme du Moteur (1) 1

A. Mécanisme du Moteur (2) 2

B. Mécanisme du boîtier de contrôle (B737) 3

C. Mécanisme du boîtier de contrôle (B738) 4

D. Boîtier d'interrupteurs 5

LISTE DES PIECES ACCESSOIRES 6, 7

INDEX 8

INDICA

A. Mecanismo del Motor (1) 1

A. Mecanismo del Motor (2) 2

B. Mecanismo del caja de controles (B737) 3

C. Mecanismo del caja de controles (B738) 4

D. Caja de interruptores 5

LISTA DE PIEZAS ACCESORIAS 6, 7

INDICE 8

A. Motor Mechanism (1) / Motors (1)
Mécanisme du Moteur (1) / Mecanismo del Motor (1)

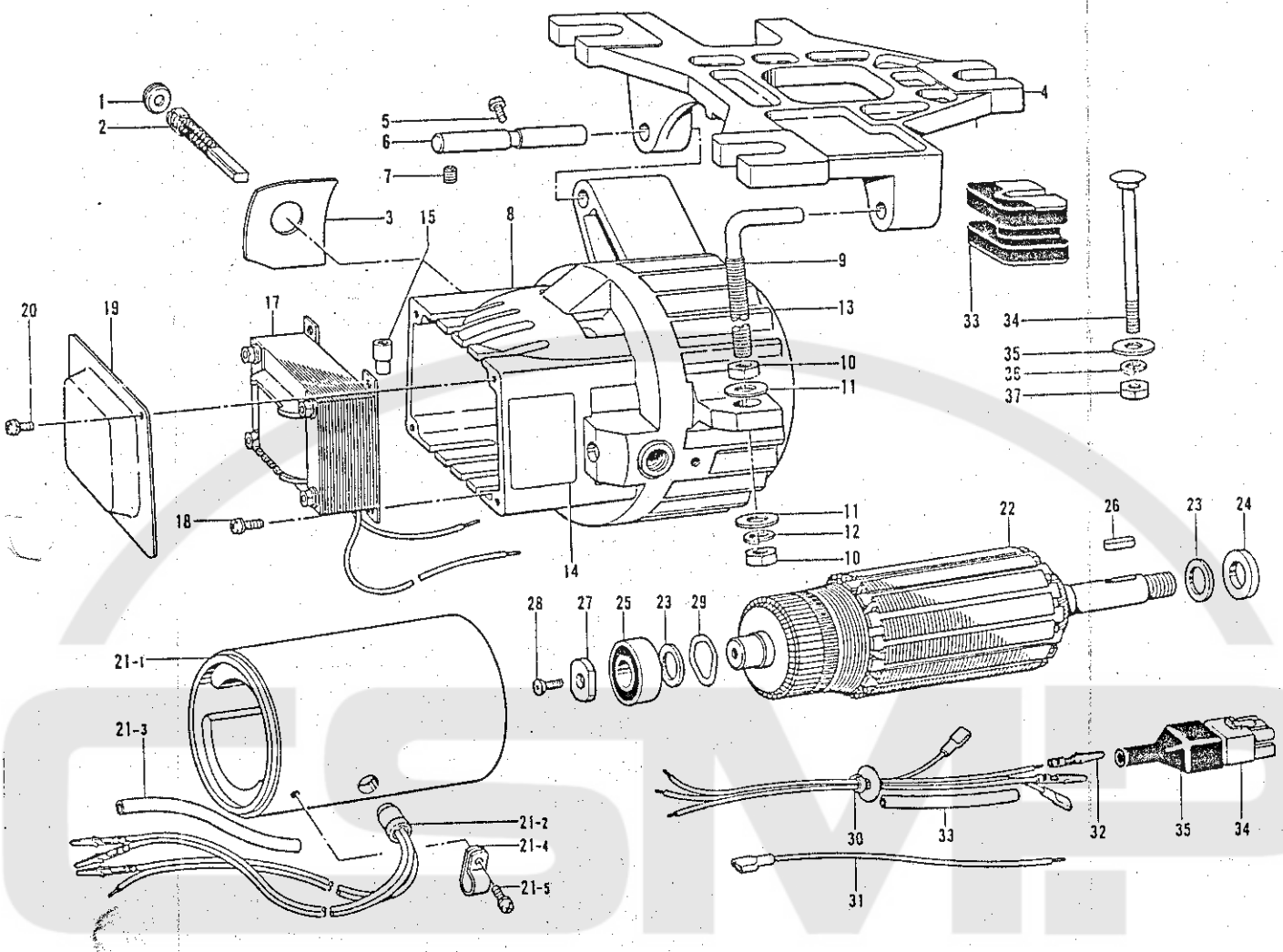

Ref. No.	Name of Parts	Q'ty	Parts No.	Assembly No.	Ref. No.	Name of Parts	Q'ty	Parts No.	Assembly No.
1	Holder Cap	2	224475-001		21- 3	Tube 7 x 65	1	226671-001	
2	MD Carbon Brush Assembly	1			21- 4	Cord Holder #7	1	224504-001	
3	Insulation Sheet	2	224476-000		21- 5	Screw 4 x 8DB	1	216872-001	
4	Base	1	225938-002		22	Rotor #145	1		
5	Screw 6 x 10	1	062061-005		23	Washer 2 x 15 x 22ST	2	224485-000	
6	Pin 9.3 x 83	1	224540-001		24	Washer 2.3 x 15 x 26ST	1	224487-000	
7	Screw 6 x 8	2	014060-832		25	Bearing 6202VV #2	1	076202-601	
8	DC Bracket Assembly (L) #3	1			26	Key 5 x 5 x 20	1	231008-001	
9	Bolt (L) 10	1	210965-001		27	Washer 2.3 x 6.9 x 22ST	1	231009-001	
10	Nut 2-10	1	021100-206		28	Screw 5 x 12F	1	214897-001	
11	Washer 10	2	025100-236		29	Washer 0.3 x 27.5 x 34.9	1	203684-001	
12	Soring Washer 2-10	1	028100-246		30	Reacted Cord Assembly	1	229930-001	
13	MD Motor Assembly	1			31	Terminal Cord	1	228226-001	
14	MD Motor Label	1			32	Plug Pin	1	217133-001	
15	Connector #3	2	214808-000		33	Tube 11 x 370PV	1	228228-001	
17	Reactor 35 mh Assembly #2	1	228221-001		34	6P Plug Pin	1	219582-001	
18	Screw 4 x 10D	4	215080-001		35	Plug Cover #11	1	219603-001	
19	Reactor Cover	1	228222-001		36	Rubber Cushion #5	3	213646-001	
20	Screw 4 x 8DB	2	216872-001		37	Bolt 8 x 85	3	210973-001	
21	Frame Assembly #2	1	230431-001		38	Washer 2.3 x 8.5 x 38ST	3	213650-001	
21- 1	Yoke Assembly #2	1	230432-001		39	Spring Washer 2-8	3	028080-246	
21- 2	Thermister #5	1	229335-001		40	Nut 2-8	3	021080-206	

A. Motor Mechanism (2) / Motors (2)
Mécanisme du Moteur (2) / Mecanismo del Motor (2)

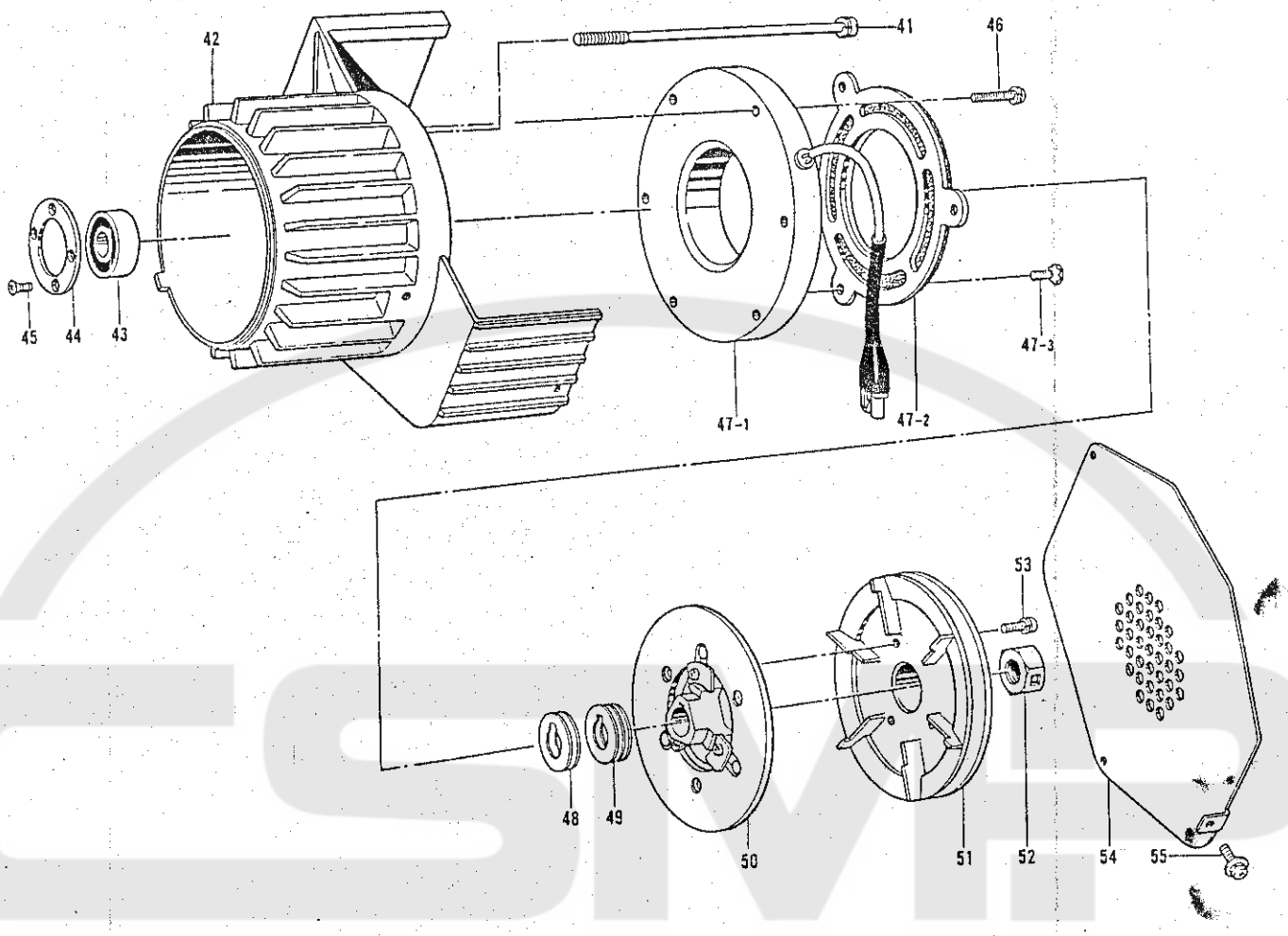

Ref. No.	Name of Parts	Q'ty	Parts No.	Assembly No.	Ref. No.	Name of Parts	Q'ty	Parts No.	Assembly No.
41	Screw 6 x 150D	4	228216-001		47- 3	Screw 5 x 12F	3	214897-001	
42	DC Bracket (R) #3	1	230999-001		48	Washer 015 x 15.1 x 30ST	4	222753-000	
43	Bearing 6202VV #2	1	076202-601		49	Washer 01 x 15.1 x 30ST	4	219517-000	
44	Bearing Washer	1	231000-001		50	Brake (A10) Amature Assembly #4	1	231013-001	
45	Screw 4 x 12	4	061401-205		51	Pully	1		
46	Screw 5 x 20	3	051520-005		52	Nut 2	1	210240-001	
47	Brake (A10) Stator Assembly	1	230836-001		53	Screw 5 x 12	3	211528-001	
47- 1	Brake (A10) Stator	1	230837-001		54	Belt Cover	1	224507-002	
47- 2	Brake (A10) Lining	1	230838-001		55	Screw 4 x 10DC	3	224508-001	

※ Note:
Replace the asbestos brake with the cork brake.
When ordering parts, please use the ref. no. 47 and 50 as a pair, and part no. 231163-001.

Hinweis:
※ Den Asbestbremsbelag durch einen Korkbremsbelag ersetzen. Zum Bestellen von Ersatzteilen die beiden Ref.-Nr. 47 und 50 zusammen und die Teile-Nr. 231163-001 angeben.

※ Remarque:
Remplacer le frein en aminante par le frein en liège.
Lors de la commande de pièces détachées, utiliser les numéros de référence 47 et 50 et la pièce N° 231163-001.

※ Nota:
Cambiar el freno de amianto por un freno de corcho.
Cuando se hace el pedido de piezas, usar los números de referencia 47 y 50 como un par, y el número de pieza 231163-001.

B. Control Box (B737) / Schaltkasten (B737)
Mécanisme du boîtier de contrôle (B737)
Mecanismo del caja de controles (B737)

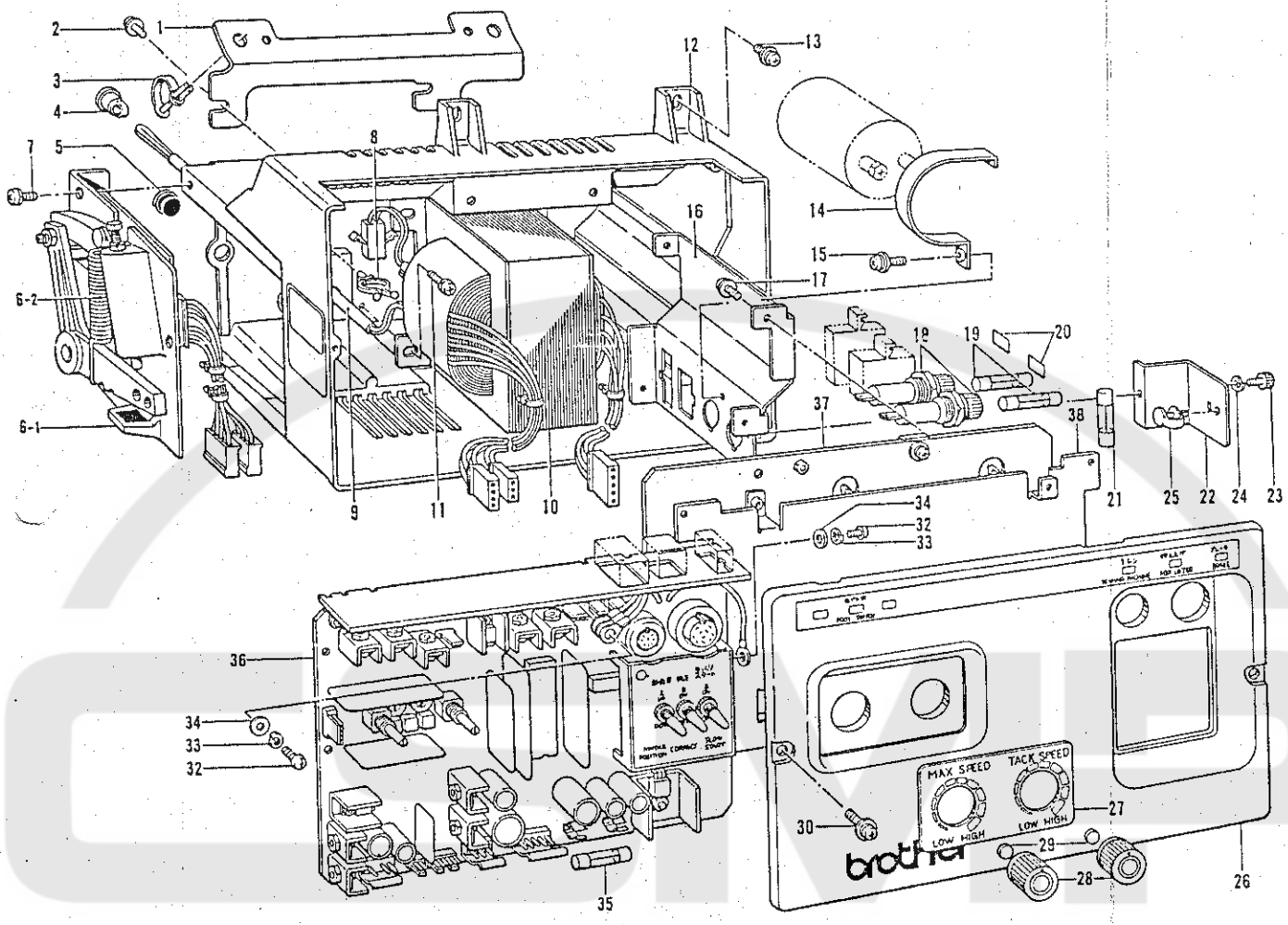

Ref. No.	Name of Parts	Q'ty	Parts No.	Assembly No.	Ref. No.	Name of Parts	Q'ty	Parts No.	Assembly No.
1	Install Plate	1	228277-001		19	Fuse			
2	Set Screw 5 x 12B	6	214447-001		20	Label			
3	Lead Clamper	2	224091-001		21	Fuse 1A	1	225432-001	
4	Bushing #61	1	215971-001		22	Fuse Cover	1	228280-001	
5	Oil Cap	1	104821-001		23	Bolt 4 x 8	1	018400-832	
6- 1	P.S Circuit Board	1	291443-001	B-6 Treadle Unit Assembly 291442-001	24	Spring Washer 2-4	1	028040-245	
					25	Lead Clamper	1	216740-001	
6- 2	Treadle Spring	1	231080-001		26	Cover	1	228281-001	
7	Set Screw 5 x 10D	3	216596-001		27	VR Indication Label	1	229559-001	
8	Perse Rock - 16	1			28	VR Control Knob	2	221024-001	
9	Varnish Glass	1	228284-001		29	VR Spacer	2	228324-001	
10	Transformer	1			30	Screw 4 x 12D	2	217093-001	
11	Set Screw 4 x 8DB	4	216872-001		32	Screw 4 x 10	2	062401-063	
12	Box	1	228287-001		33	Spring Washer 2-4	2	028040-245	
13	Set Screw 5 x 12B	2	214447-001		34	Washer 4	2	025040-173	
14	Condenser Bracket	1	———		35	Fuse 8A	1	219225-000	
15	Set Screw 4 x 8DB	3	216872-001		36	Control Circuit Unit 300B	1		
16	Connector Bracket	1	———		37	Power Circuit Unit	1		
17	Set Screw 4 x 8DB	4	216872-001		38	Circuit Setting Plate	1	228291-001	
18	Fuse Holder Assembly								

C. Control Box (B738) / Schaltkasten (B738)
Mécanisme du boîtier de contrôle (B738)
Mecanismo del caja de controles (B738)

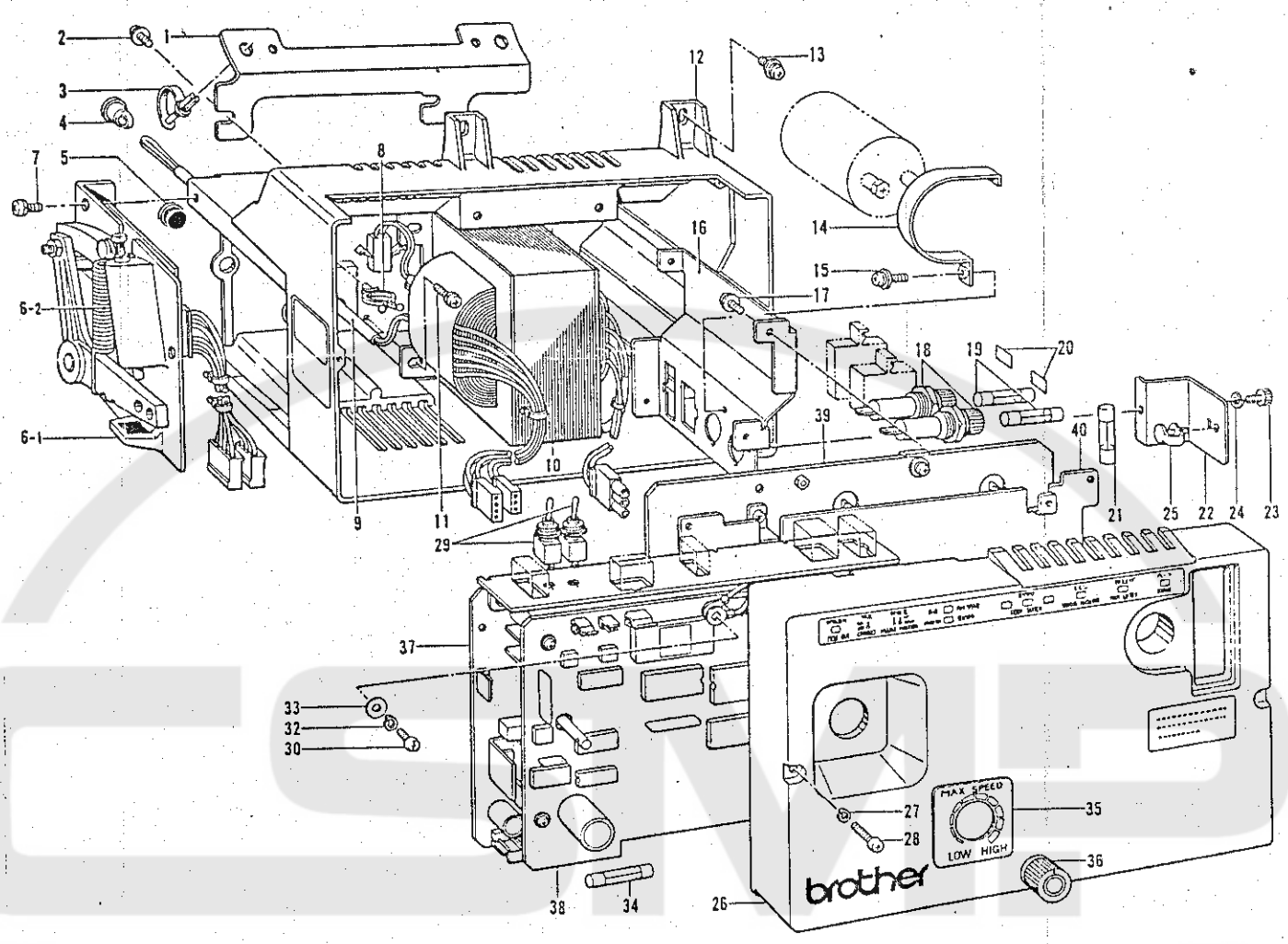

Ref. No.	Name of Parts	Q'ty	Parts No.	Assembly No.
1	Install Plate	1	228277-001	
2	Set Screw 5 x 12B	4	214447-001	
3	Lead Clamper	2	224091-001	
4	Bushing #61	1	215971-001	
5	Oil Cap	1	104821-001	
6- 1	P.S Circuit Board	1	291443-001	C-6 Treadle Unit Assembly 291442-001
6- 2	Treadle Spring	1	231080-001	
7	Set Screw 5 x 10D	3	216596-001	
8	Perse Rock - 16	1		
9	Varnish Glass	1	228284-001	
10	Transformer	1		
11	Set Screw 4 x 8DB	4	216872-001	
12	Box	1	228287-001	
13	Set Screw 5 x 12B	2	214447-001	
14	Condenser Bracket	1	———	
15	Set Screw 4 x 8DB	3	216872-001	
16	Connector Bracket	1	———	
17	Set Screw 4 x 8DB	4	216872-001	
18	Fuse Holder Assembly			
19	Fuse			

Ref. No.	Name of Parts	Q'ty	Parts No.	Assembly No.
20	Label			
21	Fuse 1A	1	225432-001	
22	Fuse Cover	1	228280-001	
23	Bolt 4 x 8	1	018400-832	
24	Spring Washer 2-4	1	028040-245	
25	Lead Clamper	1	216740-001	
26	Cover	1	228414-001	
27	Spring Washer 2-4	2	028040-245	
28	Screw 4 x 45	2	228415-001	
29	BT Switch Code Assembly	2	228432-001	
30	Screw 4 x 10	1	062401-063	
32	Spring Washer 2-4	1	028040-245	
33	Washer 4	1	025040-173	
34	Fuse 8A	1	219225-000	
35	VR Indication Label	1	229208-001	
36	VR Control Knob	1	221024-001	
37	Control Circuit Unit 470DB	1		
38	Control Circuit Unit 470C	1		
39	Power Circuit Unit	1		
40	Circuit Setting Plate	1	228294-001	

D. Switch Box / Schaltkasten
Boîtier d'interrupteurs / Caja de interruptores

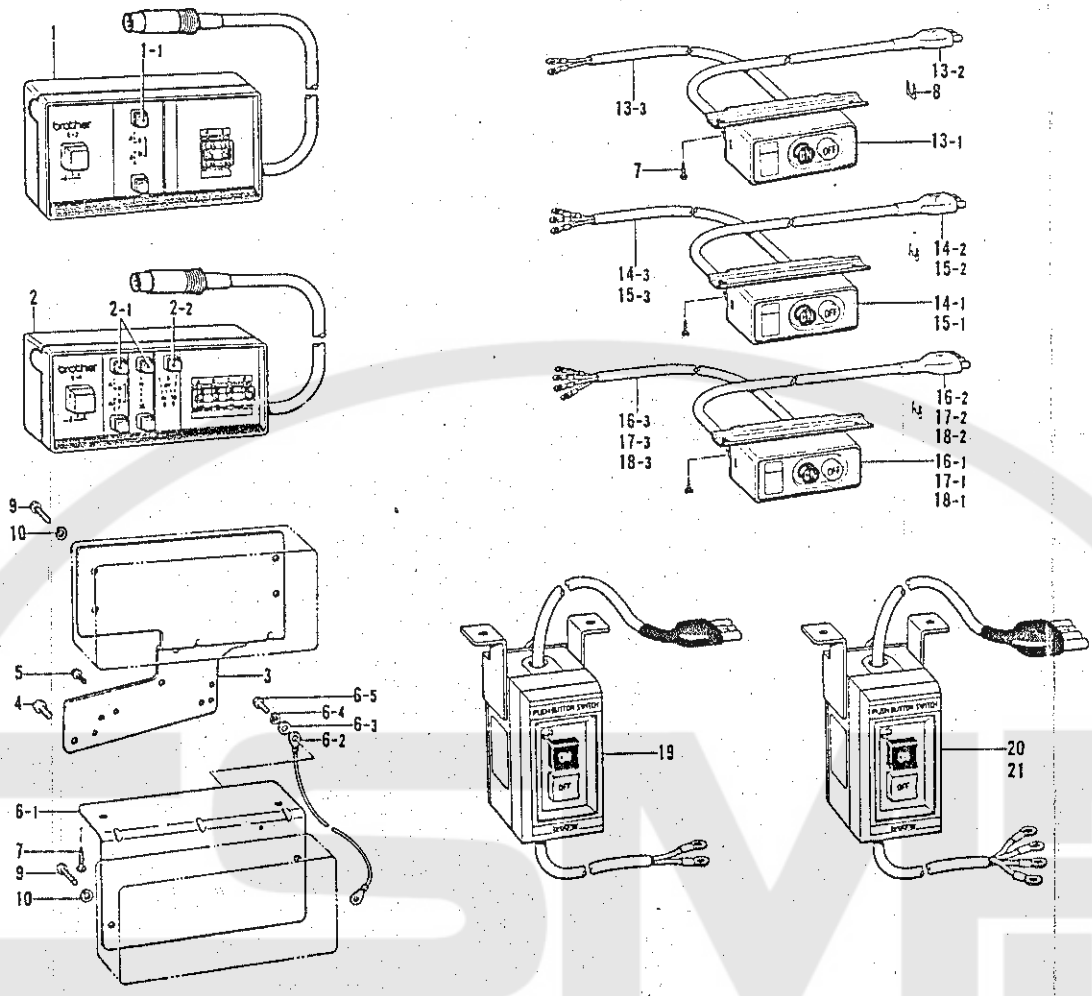

Ref. No.	Name of Parts	Q'ty	Parts No.	Assembly No.
1	Operation Box E-2	1	137209-90103	
1- 1	Stop Sewing Switch Cap (Green)	2	291359-001	
2	Operation Box E4	1	137209-90203	
2- 1	Stop Sewing Switch Cap (Green)	4	291359-001	
2- 2	Stop Sewing Switch Cap (Red)	1	291359-002	
3	DC Install Plate	1	228500-001	
4	Screw 437-40 x 12	2	062681-212	
5	Screw 357-40 x 12	2	062671-212	
6- 1	DC Install Plate #3	1	———	D-6 DC Install Plate Assembly #3 291109-001
6- 2	Terminal	1	225819-001	
6- 3	Washer 4	1	025040-173	
6- 4	Spring Washer 2-4	1	028040-245	
6- 5	Screw 4 x 10	2	062401-063	
7	Screw 4.5 x 16	2	S03816-001	
8	Steple	5	200190-001	
9	Screw 4 x 25	2	062402-502	
10	Spring Washer 2-4	2	028040-242	
13- 1	2P Switch #9	1	225539-001	D-13 2P Switch Assembly #19-3 229240-001
13- 2	3P Plug Assembly #10	1	228243-001	
13- 3	Electric Supply Cord	1	229241-001	
14- 1	2P Switch #19	1	225539-001	D-14 2P Switch Assembly #19-2 229237-001
14- 2	3P Plug Assembly #10-2	1	229238-001	
14- 3	Electric Supply Cord #2	1	229239-001	

Ref. No.	Name of Parts	Q'ty	Parts No.	Assembly No.
15- 1	2P Switch #19	1	225539-001	D-15 2P Switch Assembly #19-4 230542-001
15- 2	3P Plug Assembly #10-3	1	230543-001	
15- 3	Electric Supply Cord	1	230544-001	
16- 1	3P Switch #11	1	224510-001	D-16 2P Switch Assembly #11-6 229244-001
16- 2	4P Plug Assembly #11-3	1	229245-001	
16- 3	Electric Supply Cord #5	1	229246-001	
17- 1	3P Switch #11	1	224510-001	D-17 3P Switch Assembly #11-7 229250-001
17- 2	4P Plug Assembly #11	1	228272-001	
17- 3	Electric Supply Cord #3	1	224513-001	
18- 1	3P Switch #11	1	224510-001	D-18 3P Switch Assembly #11-8 230545-001
18- 2	4P Plug Assembly #11-5	1	230546-001	
18- 3	Electric Supply Cord	1	230547-001	
19- 1	2P Switch #16	1	223739-001	D-19 2P Switch Assembly #16-2 230548-001
19- 2	3P Plug Assembly #10	1	228243-001	
19- 3	Electric Supply Cord	1	230876-001	
20- 1	3P Switch #9-3	1	223738-001	D 20 3P Switch Assembly #9-11 230443-001
20- 2	4P Plug Assembly #11-4	1	230444-001	
20- 3	Electric Supply Cord	1	230445-001	
21- 1	3P Switch #9	1	215504-001	D-21 3P Switch Assembly #9-12 230549-001
21- 2	4P Plug Assembly #11-6	1	230550-001	
21- 3	Electric Supply Cord	1	230551-001	

DIFFERENT PARTS LIST / ZUBEHÖRLISTE
LISTE DES PIECES ACCESSOIRES / LISTA DE PIEZAS ACCESORIAS

Ref. No.	Head Machine	DB2-B737							DB2-B738						
	Sub-Class	Single-Phase				Three-Phase			Single-Phase				Three-Phase		
	Name of Parts / Volt	110V	220V	230V	240V	220V	380V	415V	110V	220V	230V	240V	220V	380V	415V
A-2	MD Carbon Brush Assembly	231556-001					231558-001		231556-001					231558-001	
A-8	DC Bracket Assembly (L) #3	231001-001					231003-001		231001-001					231003-001	
A-13	MD Motor Assembly	291408-001	291409-001	291410-001	291411-001	291412-001	291413-001	291414-001	291408-001	291409-001	291410-001	291411-001	291412-001	291413-001	291414-001
A-22	Rotor	231004-001					231018-001		231004-001					231018-001	
A-51	Pully M80-1	228840-000													
A-51	Pully M90-1	228237-001													
A-51	Pully M105-1	228839-000													
A-51	Pully M125-2	231017-001													
BC-8	Perse Rock-16	228290-001					229224-001		228290-001					229224-001	
BC-18	Fuse Holder	225433-001 (Q'ty 1)				224087-001 (Q'ty 2)	224576-001 (Q'ty 2)		225433-001 (Q'ty 1)				224087-001 (Q'ty 2)	224576-001 (Q'ty 2)	
BC-19	Fuse	218469-001 (Q'ty 1)(15A)				215822-000 (Q'ty 2)(5A)	215769-001 (Q'ty 2) (3A)		218469-001 (Q'ty 1)(15A)				215822-000 (Q'ty 2)(5A)	215769-001 (Q'ty 2)(3A)	
BC-20	Label	224090-001 (Q'ty 1)				(Q'ty 2)	229160-001 (Q'ty 2)		224090-001 (Q'ty 1)				(Q'ty 2)	229160-001 (Q'ty 2)	
D-13	2P Switch Assembly #19-3	229240-001	—					229240-001	—						
D-14	2P Switch Assembly #19-2	—	229237-001			—			229237-001				—		
D-15	2P Switch Assembly #19-4	Canada 230542-001	—						Canada 230542-001	—					
D-16	3P Switch Assembly #11-6	—					229244-001		—					229244-001	
D-17	3P Switch Assembly #11-7	—				229250-001	—						229250-001	—	
D-18	3P Switch Assembly #11-8	—				Canada 230545-001	—						Canada 230545-001	—	
D-19	2P Switch Assembly #16-2	America 230548-001	—						America 230548-001	—					
D-20	3P Switch Assembly #9-11	—				America 230443-001	—		—				America 230443-001	—	
D-21	3P Switch Assembly #9-12	—	Africa 230549-001			—			Africa 230549-001				—		

DIFFERENT PARTS LIST / ZUBEHÖRLISTE
LISTE DES PIECES ACCESSOIRES / LISTA DE PIEZAS ACCESORIAS

1 Phase

Ref. No.	Name of Parts \ Volt / Model		1 Phase, 110V		1 Phase, 220V		1 Phase, 230V		1 Phase, 240V	
			B737	B738	B737	B738	B737	B738	B737	B738
B-36	Control Circuit Unit 300B		291270-110	———	291270-123	———	291270-123	———	291270-123	———
C-37	Control Circuit Unit 470DB		———	291271-110	———	291271-123	———	291271-123	———	291271-123
C-38	Control Circuit Unit 470C 25		———	291272-001	———	291272-001	———	291272-001	———	291272-001
B-37 C-39	Power Circuit Unit		291273-001		291274-001					
B C-10	Transformer	6V	229963-001	229946-001	229643-001	229218-001	229645-001	229222-001	229646-001	229223-001
		12V	———	———	230660-001	230661-001	———	———	231335-001	231336-001

3 Phase

Ref. No.	Name of Parts \ Volt / Model		3 Phase, 220V, 240V		3 Phase, 380V		3 Phase, 415V	
			B737	B738	B737	B738	B737	B738
B-36	Control Circuit Unit 300B		291270-323	———	291270-340	———	291270-340	———
C-37	Control Circuit Unit 470DB		———	291271-323	———	291271-340	———	291271-340
C-38	Control Circuit Unit 470C 25		———	291272-001	———	291272-001	———	291272-001
B-37 C-39	Power Circuit Unit		291275-001		291276-001			
B C-10	Transformer	6V	229643-001	229218-001	229561-001	229219-001	230214-001	230435-001
		12V	———	———	229623-001	229220-001	229644-001	229221-001